MAINE TURNPIKE AUTHORITY

MAINE TURNPIKE

CONTRACT DOCUMENTS

CONTRACT 2018.17

AUBURN EXIT 75
TOLL SYSTEM UPGRADES
AND STREAM RELOCATION (MM 75.3)

KENNEBUNK EXIT 25
TOLL SYSTEM UPGRADES (MM 25.5)

WELLS EXIT 19
DIRECTIONAL BORE (MM 19.0)

NOTICE TO CONTRACTORS

PROPOSAL

CONTRACT AGREEMENT

CONTRACT BOND

FINAL LIEN AND CLAIM WAIVER AND AFFIDAVIT

SPECIFICATIONS

MAINE TURNPIKE AUTHORITY

SPECIFICATIONS

The Specifications are divided into two parts:
Part I, Supplemental Specifications and Part II, Special Provisions.

The Maine Turnpike Supplemental Specifications are additions and alterations to the 2014 Maine Department of Transportation Standard Specifications. See Subsection 100.1.

TABLE OF CONTENTS

	PAGE
NOTICE TO CONTRACTORS	N-1
PROPOSAL	P-1
CONTRACT AGREEMENT	C-1
CONTRACT BOND	CB-1
FINAL LIEN AND CLAIM WAIVER AND AFFIDAVIT	F-1

ARRANGEMENT OF SPECIFICATIONS

PART I – SUPPLEMENTAL SPECIFICATIONS	SS-1
PART II - SPECIAL PROVISIONS	SP-1

MAINE TURNPIKE AUTHORITY

NOTICE TO CONTRACTORS

Sealed Proposals will be received by the Maine Turnpike Authority for:

CONTRACT 2018.17

AUBURN EXIT 75
TOLL SYSTEM UPGRADES
AND STREAM RELOCATION (MM 75.3)

KENNEBUNK EXIT 25
TOLL SYSTEM UPGRADES (MM 25.5)

WELLS EXIT 19
DIRECTIONAL BORE (MM 19.0)

at the office of the Maine Turnpike Authority, 2360 Congress Street, Portland, ME, until 11:00 a.m., prevailing time as determined by the Authority on June 26, 2018 at which time and place the Proposals will be publicly opened and read. Bids will be accepted from Contractors **prequalified** by the Maine Department of Transportation for Bridge Construction Projects, with an electrical subcontractor **prequalified** by the Maine Department of Transportation for Traffic Signals and Lighting Projects. All other bids may be rejected. This Project includes a wage determination developed by the State of Maine Department of Labor.

The work at Exit 75 includes toll system upgrades, installation of a precast utility building, stream relocation, culvert sliplining as well as installation of a precast utility building and toll system upgrades at Exit 25, and a directional bore at Exit 19. The Exit 75 work includes relocating the northbound on and off ramp toll zones (mast arms and toll equipment) to the tangent portion of the ramps, relocating the bridge mounted toll equipment to a proposed gantry to the east of the bridge; installing concrete roadway slabs for each relocated toll zone, and installation of all associated power and communications infrastructure needed to support the toll system upgrades.

Plans and Contract Documents may be examined by prospective Bidders weekdays between 8:00 a.m. and 4:30 p.m. at the office of the Maine Turnpike Authority, 2360 Congress Street, Portland, Maine. **The half size Plans** and Contract Documents may be obtained from the Authority upon payment of Fifty ($50.00) Dollars for each set, which payment will not be returned. Checks shall be made payable to: Maine Turnpike Authority. The Plans and Contract Documents may also be downloaded from a link on our website at http://www.maineturnpike.com/project-and-planning/Construction-Contracts.aspx.

For general information regarding Bidding and Contracting procedures, contact Nate Carll, Purchasing Manager, at (207)482-8115. For information regarding Schedule of Items, plan holders list and bid results, visit our website at **http://www.maineturnpike.com/project-and-planning/Construction-Contracts.aspx** . For Project specific information, fax all questions to Nate Carll, Purchasing Manager, at (207) 871-7739 or email ncarll@maineturnpike.com. Responses will

not be prepared for questions received by telephone. Bidders shall not contact any other Authority staff or Consultants for clarification of Contract provisions, and the Authority will not be responsible for any interpretations so obtained.

All work shall be governed by the Specifications entitled "State of Maine, Department of Transportation, Standard Specifications, Revision of November 2014", "Standard Details, Revision of November 2014" and "Best Management Practices for Erosion and Sediment Control", latest issue. Copies and recent updates to these publications can be downloaded at: http://www.maine.gov/mdot/contractors/publications/ .

Proposals must be accompanied by an original bid bond, certified or cashier's check payable to the Maine Turnpike Authority in an amount not less than Five (5%) Percent of the Total Amount in the Proposal, but not less than $500.00. The Bidder to whom a Contract is awarded will be required to furnish a Surety Corporation Bond, satisfactory to the Authority, on the standard Contract Bond form of the Authority, for a sum not less than the Total Amount of the Proposal.

Proposals must be made upon the Proposal Forms furnished by the Authority separately with the Contract Documents, and must be enclosed in the sealed special addressed envelope provided therefore bearing the name and address of the Bidder, the name of the Contract, and the date and time of Proposal opening on the outside.

A pre-bid conference will be held on June 12, 2018 at 10:00 a.m. at the Maine Turnpike Authority, 2360 Congress Street, Portland, Maine.

The Authority reserves the unqualified right to reject any or all Proposals and to accept that Proposal which in its sole judgment will under all circumstances serve its best interest.

MAINE TURNPIKE AUTHORITY

Nate Carll
Purchasing Manager
Maine Turnpike Authority

Portland, Maine

Maine Turnpike Authority

MAINE TURNPIKE

PROPOSAL

CONTRACT 2018.17

AUBURN EXIT 75
TOLL SYSTEM UPGRADES
AND STREAM RELOCATION (MM 75.3)

KENNEBUNK EXIT 25
TOLL SYSTEM UPGRADES (MM 25.5)

WELLS EXIT 19
DIRECTIONAL BORE (MM 19.0)

MAINE TURNPIKE AUTHORITY
PROPOSAL
CONTRACT 2018.17

AUBURN EXIT 75
TOLL SYSTEM UPGRADES
AND STREAM RELOCATION (MM 75.3)

KENNEBUNK EXIT 25
TOLL SYSTEM UPGRADES (MM 25.5)

WELLS EXIT 19
DIRECTIONAL BORE (MM 19.0)

TO MAINE TURNPIKE AUTHORITY:

The work at Exit 75 includes toll system upgrades, installation of a precast utility building, stream relocation, culvert sliplining as well as installation of a precast utility building and toll system upgrades at Exit 25, and a directional bore at Exit 19. The Exit 75 work includes relocating the northbound on and off ramp toll zones (mast arms and toll equipment) to the tangent portion of the ramps, relocating the bridge mounted toll equipment to a proposed gantry to the east of the bridge; installing concrete roadway slabs for each relocated toll zone, and installation of all associated power and communications infrastructure needed to support the toll system upgrades.

This Work will be done under a Contract known as Contract 2018.17 according to the Plans and Specifications which are on file in the office of the Maine Turnpike Authority, 2360 Congress Street, Portland, Maine.

On the acceptance of this Proposal for said Work, the undersigned will give the required bond with good security conditioned for the faithful performance of said Work, according to said Plans and Specifications, and the doing of all other work required by said Specifications for the consideration herein named and with the further condition that the Maine Turnpike Authority shall be saved harmless from any and all damages that might accrue to any person, persons or property by reason of the carrying out of said Work, or any part thereof, or by reason of negligence of the undersigned, or any person or persons under his employment and engaged in said Work.

The undersigned hereby declares that he/she has carefully examined the Plans, Specifications and other Contract Documents, and that he/she will contract to carry out and complete the said Work as specified and delineated at the price per unit of measure for each scheduled item of Work stated in the Schedule of Prices as follows:

It is understood that the TOTAL AMOUNT stated by the undersigned in the following Schedule of Prices is based on approximate quantities and will be used solely for the comparison of bids, and that the quantities stated in the Schedule of Prices for the various items are estimates only and may be increased or decreased all as provided in the Specifications.

SCHEDULE OF BID PRICES
CONTRACT NO. 2018.17
AUBURN EXIT 75 TOLL SYSTEM UPGRADES & STREAM RELOCATION
KENNEBUNK EXIT 25 TOLL SYSTEM UPGRADES
WELLS EXIT 19 DIRECTIONAL BORE

Item No	Item Description	Units	Approx. Quantities	Unit Prices in Numbers		Bid Amount in Numbers	
				Dollars	Cents	Dollars	Cents
202.202	REMOVING PAVEMENT SURFACE	Square Yard	2,650				
203.20	COMMON EXCAVATION	Cubic Yard	15,750				
203.25	GRANULAR BORROW	Cubic Yard	4,950				
203.33	SPECIAL FILL	Cubic Yard	400				
304.10	AGGREGATE SUBBASE COURSE - GRAVEL	Cubic Yard	990				
304.14	AGGREGATE BASE COURSE - TYPE A	Cubic Yard	670				
403.207	HOT MIX ASPHALT, 19.0 mm NOMINAL MAXIMUM SIZE	Ton	190				
403.208	HOT MIX ASPHALT, 12.5 mm NOMINAL MAXIMUM SIZE	Ton	340				
403.2084	HOT MIX ASPHALT, 12.5 mm NOMINAL MAXIMUM SIZE, (SIDEWALKS, DRIVES, ISLANDS, & INCIDENTALS)	Ton	40				
403.212	HOT MIX ASPHALT, 4.75 mm NOMINAL MAXIMUM SIZE	Ton	72				
403.213	HOT MIX ASPHALT, 12.5 mm NOMINAL MAXIMUM SIZE (BASE AND INTERMEDIATE BASE)	Ton	420				

CARRIED FORWARD:

Item No	Item Description	Units	Approx. Quantities	Unit Prices in Numbers		Bid Amount in Numbers	
				Dollars	Cents	Dollars	Cents
			BROUGHT FORWARD:				
409.15	BITUMINOUS TACK COAT, APPLIED	Gallon	400				
419.30	SAWING BITUMINOUS PAVEMENT	Linear Foot	3,500				
502.2611	STRUCTURAL CONCRETE, BUILDING FOUNDATION AND GENERATOR PAD	Cubic Yard	46				
502.262	STRUCTURAL CONCRETE, ROADWAY SLAB ON GRADE	Cubic Yard	230				
503.14	EPOXY-COATED REINFORCING STEEL, FABRICATED AND DELIVERED	Pound	1,100				
503.15	EPOXY-COATED REINFORCING STEEL, PLACING	Pound	1,100				
503.18	GLASS FIBER REINFORCED POLYMER (GFRP) REINFORCING BARS, FABRICATED AND DELIVERED	Pound	24,000				
503.19	GLASS FIBER REINFORCED POLYMER (GFRP) REINFORCING BARS, PLACING	Pound	24,000				
503.90	SYNTHETIC FIBER REINFORCEMENT	Pound	1,150				
504.61	TOLL GANTRY - SOUTHBOUND	Lump Sum	1				
509.202	CULVERT SLIPLINE (110 LF)	Lump Sum	1				
511.071	COFFERDAM: SLIP LINING	Lump Sum	1				
			CARRIED FORWARD:				

Item No	Item Description	Units	Approx. Quantities	Unit Prices in Numbers		Bid Amount in Numbers	
				Dollars	Cents	Dollars	Cents
				BROUGHT FORWARD:			
511.072	COFFERDAM: SLOPE REPAIR	Lump Sum	1				
515.202	CLEAR PROTECTIVE COATING FOR CONCRETE SURFACES	Square Yard	690				
515.23	EPOXY OVERLAY	Square Yard	25				
526.306	TEMPORARY CONCRETE BARRIER TYPE I - SUPPLIED BY THE AUTHORITY (2,600 LF)	Lump Sum	1				
527.341	WORK ZONE CRASH CUSHION - TL-3	Each	2				
527.342	WORK ZONE CRASH CUSHION - TL-2	Each	4				
603.2453	54 INCH REINFORCED CONCRETE PIPE - CLASS V	Linear Foot	26				
603.28	CONCRETE COLLAR	Each	1				
606.13	31" W-BEAM GUARDRAIL - MID-WAY SPLICE (7' STEEL POST, 8" OFFSET BLOCKS, SINGLE FACED)	Linear Foot	612.5				
606.1351	TERMINAL END - ANCHORED END 31" W-BEAM GUARDRAIL	Each	3				
606.352	REFLECTORIZED BEAM GUARDRAIL DELINEATOR	Each	110				
606.353	REFLECTORIZED FLEXIBLE GUARDRAIL MARKER	Each	17				

CARRIED FORWARD:

Item No	Item Description	Units	Approx. Quantities	Unit Prices in Numbers		Bid Amount in Numbers	
				Dollars	Cents	Dollars	Cents
				BROUGHT FORWARD:			
606.791	GUARDRAIL - FLARED TERMINAL - 31" W-BEAM GUARDRAIL	Each	7				
610.08	PLAIN RIPRAP	Cubic Yard	111				
610.181	TEMPORARY STONE CHECK DAM	Cubic Yard	10				
610.21	RIVER STONES	Cubic Yard	100				
613.319	EROSION CONTROL BLANKET	Square Yard	3,360				
615.07	LOAM	Cubic Yard	1,400				
618.1401	SEEDING METHOD NUMBER 2, PLAN QUANTITY	Unit	102				
618.1402	SEEDING METHOD NUMBER 2 MODIFIED, PLAN QUANTITY	Unit	22				
619.1201	MULCH, PLAN QUANTITY	Unit	124				
619.1202	TEMPORARY MULCH	Lump Sum	1				
620.58	EROSION CONTROL GEOTEXTILE	Square Yard	247				
621.7331	LANDSCAPING (RIPARIAN STREAM BANK ZONE) SHRUB, 2'-3' GROUP A	Each	444				

CARRIED FORWARD:

Item No	Item Description	Units	Approx. Quantities	Unit Prices in Numbers		Bid Amount in Numbers	
				Dollars	Cents	Dollars	Cents
			BROUGHT FORWARD:				
621.7341	LANDSCAPING (RIPARIAN STREAM SHELF ZONE) TREE, 3'-4' GROUP B	Each	204				
621.7342	LANDSCAPING (RIPARIAN STREAM SHELF ZONE) SHRUB, 2'-3' GROUP C	Each	340				
621.7351	LANDSCAPING (RIPARIAN STREAM HIGHER GROUND ZONE) TREE, 3'-4' GROUP D	Each	60				
621.7352	LANDSCAPING (RIPARIAN STREAM HIGHER GROUND ZONE) SHRUB, 2'-3' GROUP E	Each	84				
621.7361	LANDSCAPING (UPLAND ZONE) TREE 3'-4' GROUP F	Each	164				
621.7362	LANDSCAPING (UPLAND ZONE) SHRUB 2'-3' GROUP G	Each	196				
626.12	36" X 24" X 36" QUAZITE JUNCTION BOX	Each	7				
626.13	18" X 12" X 18" QUAZITE JUNCTION BOX	Each	2				
626.332	30-INCH DIAMETER, GREATER THAN 8-FEET LONG, AND ALL 36-INCH AND 42-INCH DIAMETER FOUNDATIONS	Cubic Yard	20				
627.18	12 INCH SOLID WHITE PAVEMENT MARKING LINE	Linear Foot	240				
627.681	TEMPORARY 6 INCH PAINTED PAVEMENT MARKING LINE, YELLOW OR WHITE	Linear Foot	2,800				
627.712	WHITE OR YELLOW PAVEMENT MARKING LINE	Linear Foot	4,100				

CARRIED FORWARD:

Item No	Item Description	Units	Approx. Quantities	Unit Prices in Numbers		Bid Amount in Numbers	
				Dollars	Cents	Dollars	Cents
				BROUGHT FORWARD:			
627.73	TEMPORARY 6 INCH PAVEMENT MARKING TAPE	Linear Foot	5,950				
627.731	TEMPORARY 6 INCH BLACK PAVEMENT MARKING TAPE	Linear Foot	3,700				
627.77	REMOVING EXISTING PAVEMENT MARKINGS	Square Foot	1,400				
629.05	HAND LABOR, STRAIGHT TIME	Hour	40				
631.10	AIR COMPRESSOR (INCLUDING OPERATOR)	Hour	40				
631.11	AIR TOOL (INCLUDING OPERATOR)	Hour	40				
631.12	ALL PURPOSE EXCAVATOR (INCLUDING OPERATOR)	Hour	40				
631.172	TRUCK - LARGE (INCLUDING OPERATOR)	Hour	40				
631.32	CULVERT CLEANER (INCLUDING OPERATOR)	Hour	40				
631.36	FOREMAN	Hour	40				
631.50	JACKHAMMER (AIR TOOL INCLUDING OPERATOR)	Hour	40				
631.51	BUCKET TRUCK	Hour	40				

CARRIED FORWARD:

Item No	Item Description	Units	Approx. Quantities	Unit Prices in Numbers		Bid Amount in Numbers	
				Dollars	Cents	Dollars	Cents
			BROUGHT FORWARD:				
631.52	SCISSOR LIFT	Hour	40				
631.53	ELECTRICIAN	Hour	40				
631.54	ELECTRICIAN'S APPRENTICE	Hour	40				
639.19	FIELD OFFICE, TYPE B	Each	1				
645.1091	REMOVE AND RESET SIGN ON WOODEN POST	Each	4				
645.1092	REMOVE AND RESET SIGN ON METAL BEAM	Each	2				
652.33	DRUM	Each	50				
652.34	CONE	Each	90				
652.35	CONSTRUCTION SIGNS	Square Foot	856				
652.361	MAINTENANCE OF TRAFFIC CONTROL DEVICES	Lump Sum	1				
652.38	FLAGGERS	Hour	80				
652.41	PORTABLE-CHANGEABLE MESSAGE SIGN	Each	1				

CARRIED FORWARD:

Item No	Item Description	Units	Approx. Quantities	Unit Prices in Numbers		Bid Amount in Numbers	
				Dollars	Cents	Dollars	Cents
			BROUGHT FORWARD:				
652.45	TRUCK MOUNTED ATTENUATOR	Calendar Day	20				
655.02	DVAS MOUNT INSTALLATION	Each	4				
655.04	INSTALLATION OF SENSOR LOOPS	Lump Sum	1				
655.05	INSTALLATION OF AVI ANTENNA	Each	8				
655.06	INSTALLATION OF AVI READERS	Each	4				
655.102	#2 AWG WIRE	Linear Foot	21,800				
655.110	#10 AWG WIRE	Linear Foot	3,200				
655.14	4PR/24 (CATEGORY 5E) CABLE	Linear Foot	400				
655.15	LMR 400 CABLE	Linear Foot	400				
655.16	FIBER OPTIC CABLE	Linear Foot	2,500				
655.165	FIBER OPTIC SPLICE PANEL	Each	3				
655.204	3" SCHEDULE 80 PVC CONDUIT	Linear Foot	7,600				

CARRIED FORWARD:

Item No	Item Description	Units	Approx. Quantities	Unit Prices in Numbers		Bid Amount in Numbers	
				Dollars	Cents	Dollars	Cents
			BROUGHT FORWARD:				
655.205	4" SCHEDULE 80 PVC CONDUIT	Linear Foot	80				
655.30	INSTALL COMMUNICATIONS CABINET (PROVIDED BY MTA)	Each	2				
655.31	INSTALL COMMUNICATIONS CABINET (PROVIDED BY CONTRACTOR)	Each	1				
655.41	P44 NEMA CABINET	Each	3				
655.431	60 AMP PANELBOARD CABINET	Each	6				
655.71	REMOVAL OF EXISTING SELECT TOLL EQUIPMENT	Lump Sum	1				
655.80	LIGHTNING SUPPRESSION SYSTEM	Lump Sum	1				
655.94	GENERATOR AND EQUIPMENT	Lump Sum	1				
655.951	UTILITY BUILDING ELECTRICAL: AUBURN	Lump Sum	1				
655.952	UTILITY BUILDING ELECTRICAL: KENNEBUNK	Lump Sum	1				
656.50	BALED HAY, IN PLACE	Each	70				
656.60	TEMPORARY BERMS	Linear Foot	600				

CARRIED FORWARD:

Item No	Item Description	Units	Approx. Quantities	Unit Prices in Numbers		Bid Amount in Numbers	
				Dollars	Cents	Dollars	Cents
				BROUGHT FORWARD:			
656.62	TEMPORARY SLOPE DRAINS	Linear Foot	110				
656.632	30 INCH TEMPORARY SILT FENCE	Linear Foot	3,450				
659.10	MOBILIZATION	Lump Sum	1				
800.011	UTILITY BUILDING: AUBURN	Lump Sum	1				
800.012	UTILITY BUILDING: KENNEBUNK	Lump Sum	1				
830.25	HORIZONTAL DIRECTIONAL DRILLING, 3 INCH HDPE CONDUIT INSTALLATION	Linear Foot	2,150				
					TOTAL:		

Acknowledgment is hereby made of the following Addenda received since issuance of the Plans and Specifications: _____

_____

_____

Accompanying this Proposal is an original bid bond, cashiers or certified check on _____ Bank, for _____, payable to the Maine Turnpike Authority. In case this Proposal shall be accepted by the Maine Turnpike Authority and the undersigned should fail to execute a Contract with, and furnish the security required by the Maine Turnpike Authority as set forth in the Specifications, within the time fixed therein, an amount of money equal to Five (5%) Percent of the Total Amount of the Proposal for the Contract awarded to the undersigned, but not less than $500.00, obtained out of the original bid bond, cashier's or certified check, shall become the property of the Maine Turnpike Authority; otherwise the check will be returned to the undersigned.

The performance of said Work under this Contract will be completed during the time specified in Subsection 107.1.

It is agreed that time is of the essence of this Contract and that I (we) will, in the event of my (our) failure to complete the Work within the time limit named above, pay to Maine Turnpike Authority liquidated damages in the amount or amounts stated in the Specifications.

The undersigned is an Individual/Partnership/Corporation under the laws of the State of _____, having principal office at _____, thereunto duly authorized.

_____ *(SEAL)*

_____ *(SEAL)*

Affix Corporate Seal
or Power of Attorney
Where Applicable

_____ *(SEAL)*

By: _____

Its: _____

Information below to be typed or printed where applicable:

INDIVIDUAL:

(Name)	(Address)

PARTNERSHIP - Name and Address of General Partners:

(Name)	(Address)
(Name)	(Address)
(Name)	(Address)
(Name)	(Address)

INCORPORATED COMPANY:

(President)	(Address)
(Vice-President)	(Address)
(Secretary)	(Address)
(Treasurer)	(Address)

MAINE TURNPIKE AUTHORITY

MAINE TURNPIKE

YORK TO AUGUSTA

CONTRACT AGREEMENT

This Agreement made and entered into between the Maine Turnpike Authority, and sometimes termed the "Authority", and _____

_____

herein termed the "Contractor":

WITNESSETH: That the Authority and the Contractor, in consideration of the premises and of the mutual covenants, considerations and agreements herein contained, agree as follows:

FIRST: The parties hereto mutually agree that the documents attached hereto and herein incorporated and made a part hereof collectively evidencing and constituting the entire Contract to the same extent as if herein written in full, are the Notice to Contractors, the Accepted Proposal, the Specifications, the Plans, this Agreement, the Contract Bond and all Addenda to the Contract Documents duly issued and herewith enumerated:

_____

_____

SECOND: The Contractor for and in consideration of certain payments to be made as hereafter specified, hereby covenants and agrees to perform and execute all of the provisions of this Contract and of all documents and parts attached hereto and made a part thereof, and at his own cost and expense to furnish and perform everything necessary and required to construct and complete, ready for its intended purpose, in accordance with the Contract and such instructions as the Engineer may give, acceptable to the Authority, in the times provided, all of the Work covered and included under Contract No. _____ covering _____ as herein described.

THIRD: In consideration of the performance by the Contractor of his covenants and agreements as herein set forth, the Authority hereby covenants and agrees to pay the Contractor according to the Schedule of Prices set forth in the Proposal with additions and deductions as elsewhere herein provided in the times and in the manner stated in the Specifications. This Agreement shall insure to the benefit of, and shall be binding upon the parties hereto, and upon their respective successors and assigns; but neither party hereto shall assign or transfer his interest herein in whole or in part without the consent of the other, except as herein provided.

IN WITNESS WHEREOF the parties to this Agreement have executed the same in quintuplicate.

AUTHORITY -

MAINE TURNPIKE AUTHORITY

By: _____

Title: CHAIRMAN

Date of Signature: _____

ATTEST:

_____
Secretary

CONTRACTOR -

_____
CONTRACTOR

By: _____

Title: _____

Date of Signature: _____

WITNESS:

_____

CONTRACT BOND

KNOW ALL MEN BY THESE PRESENTS that _____

of _____ in the County of _____ and State of _____

as Principal, and _____ a Corporation duly organized under the

laws of the State of _____ and having a usual place of business in _____

_____

As Surety, are held and firmly bound unto the Maine Turnpike Authority in the sum of _____Dollars ($_____.___), to be paid to said Maine Turnpike Authority, or its successors, for which payment, well and truly to be made, we bind ourselves, our heirs, executors, successors and assigns jointly and severally by these presents.

The condition of this obligation is such that the Principal, designated as Contractor in the foregoing Contract No. _____ shall faithfully perform the Contract on his part and satisfy all claims and demands incurred for the same and shall pay all bills for labor, material, equipment and all other items contracted for, or used by him, in connection with the Work contemplated by said Contract, and shall fully reimburse the Obligee for all outlay and expense which the Obligee may incur in making good any default of said Principal, then this Obligation shall be null and void; otherwise it shall remain in full force and effect.

Signed and sealed this _____ day of _____, A.D., 201___

Witnesses:	CONTRACTOR	
_____	_____	*(SEAL)*
_____	_____	*(SEAL)*
_____	_____	*(SEAL)*
	SURETY	
_____	_____	*(SEAL)*
_____	_____	*(SEAL)*
_____	_____	*(SEAL)*

(Surety must attach copy of Power of Attorney showing authority of Office or Agent to execute bonds)

FINAL LIEN AND CLAIM WAIVER AND AFFIDAVIT

Upon receipt of the sum of _____, which sum represents the total amount paid, including the current payment for work done and materials supplied for Project No. _____, in _____, Maine, under the undersigned's Contract with the Maine Turnpike Authority.

The undersigned, on oath, states that the Final Payment of _____ is the final payment for all work, labor, materials, services and miscellaneous (all of which are hereinafter referred to as "Work Items") supplied to the said Project through _____and that no additional sum is claimed by the undersigned respecting said Project.

The undersigned, on oath, states that all persons and firms who supplied Work Items to the undersigned in connection with said Project have been fully paid by the undersigned for such Work Items or that such payment will be fully effected immediately upon receipt of this payment.

In consideration of the payment herewith made, the undersigned does fully and finally release and hold harmless the Maine Turnpike Authority, and its Surety, if any, from any and all claims, liens or right to claim or lien, arising out of this Project under any applicable bond, law or statute.

It is understood that this Affidavit is submitted to assure the Owner and others that all liens and claims relating to the Work Items furnished by the undersigned are paid.

_____
(Contractor)

By: _____

Title: _____

State of MAINE

County of _____

I, _____, hereby certify on behalf of _____
(Company Officer) *(Company Name)*

its _____, being first duly sworn and stated that the foregoing representations are
(Title)

are true and correct upon his own knowledge and that the foregoing is his free act and deed in said capacity and the free act and deed of the above-named _____
(Company Name)

The above-named, _____, personally appeared before me this ____ day of _____ and swears that this is his free act and deed.

(SEAL)

_____
Notary Public

My Commission Expires: _____

MAINE TURNPIKE AUTHORITY

SPECIFICATIONS

PART I – SUPPLEMENTAL SPECIFICATIONS

(Rev. November 10, 2016)

Supplemental Specifications available on the Maine Turnpike Authority website

MAINE TURNPIKE AUTHORITY

SPECIFICATIONS

PART II – SPECIAL PROVISIONS

PART II - SPECIAL PROVISIONS

SECTION	TITLE	PAGE
__	GENERAL DESCRIPTION OF WORK	SP-1
__	PLANS	SP-1
101.2	DEFINITION	SP-1
103.4	NOTICE OF AWARD	SP-1
104.3.8	WAGE RATES AND LABOR LAWS	SP-2
104.4.6	UTILITY COORDINATION	SP-7
104.4.7	COOPERATION WITH OTHER CONTRACTORS	SP-7
105.8.2	PERMIT REQUIREMENTS	SP-8
105.8.3	WETLAND AND WATER BODY IMPACTS	SP-9
107.1	CONTRACT TIME AND CONTRACT COMPLETION DATE	SP-10
107.1.1	SUBSTANTIAL COMPLETION	SP-10
107.4.6	PROSECUTION OF WORK	SP-10
107.4.7	LIMITATIONS OF OPERATIONS	SP-11
401.	HOT MIX ASPHALT PAVEMENT	SP-12
403.	HOT MIX ASPHALT PAVEMENT	SP-17
403.	HOT MIX ASPHALT PAVEMENT	SP-18
409.	BITUMINOUS TACK COAT	SP-19
419.	SAWING AND SEALING JOINTS IN BITUMINOUS PAVEMENT (Sawing Bituminous Pavement)	SP-21
502.	STRUCTURAL CONCRETE (Structural Concrete, Building Foundation and Generator Pad) (Structural Concrete, Roadway Slab on Grade)	SP-22
503.	REINFORCING STEEL (GFRP Reinforcing)	SP-23
503.	REINFORCING STEEL (Synthetic Fiber Reinforcement)	SP-27

SECTION	TITLE	PAGE
504.	STRUCTURAL STEEL	SP-28
504.	STRUCTURAL STEEL (Toll Gantry)	SP-29
506.	SHOP APPLIED PROTECTIVE COATING - STEEL (Zinc Rich Coating System – Shop Applied)	SP-33
509.	CULVERT SLIPLINE	SP-35
511.	COFFERDAMS	SP-48
515.	PROTECTIVE COATING FOR CONCRETE SURFACES (Clear Concrete Protective Coating)	SP-49
526.	CONCRETE BARRIER (Temporary Concrete Barrier Type I – Supplied by Authority)	SP-52
527.	ENERGY ABSORBING UNIT (Work Zone Crash Cushion)	SP-55
603.	PIPE CULVERTS AND STORM DRAINS (Reinforced Concrete Pipe) (Concrete Collar)	SP-57
606.	GUARDRAIL (31” W-Beam Guardrail – Mid-way Splice (7’ Steel Posts, 8” Offset Blocks, Single Faced))	SP-59
606.	GUARDRAIL (Terminal End – Anchored End – 31” W-Beam Guardrail)	SP-61
606.	GUARDRAIL (Guardrail – Flared Terminal – 31” W-Beam Guardrail)	SP-63
610.	STONE FILL, RIPRAP, STONE BLANKET AND STONE DITCH PROTECTION (Stone Check Dam) (River Stones)	SP-65
613.	EROSION CONTROL BLANKET	SP-68
619.	MULCH (Mulch – Plan Quantity) (Temporary Mulch)	SP-69
621.	LANDSCAPING (Tree and Shrub Plantings) (Establishment Period)	SP-71

SECTION	TITLE	PAGE
626.	FOUNDATIONS, CONDUIT, AND JUNCTION BOXES FOR HIGHWAY SIGNING, LIGHTING AND SIGNALS (Quazite Junction Box)	SP-77
627.	PAVEMENT MARKINGS (Temporary 6 Inch Pavement Marking Tape) (Temporary 6 Inch Black Pavement Marking Tape)	SP-78
627.	PAVEMENT MARKINGS (White or Yellow Pavement Marking Line)	SP-81
631.	EQUIPMENT RENTAL	SP-83
645.	HIGHWAY SIGNING (Remove and Reset Sign on Wooden Posts) (Remove and Reset Sign on Metal Beam)	SP-85
652.	MAINTENANCE OF TRAFFIC (Specific Project Maintenance of Traffic Requirements)	SP-87
652.	MAINTENANCE OF TRAFFIC (Truck Mounted Attenuator)	SP-88
655.	ELECTRICAL WORK	SP-90
655.	ELECTRICAL WORK (DVAS Camera Mount Installation)	SP-95
655.	ELECTRICAL WORK (Installation of Sensor Loops)	SP-97
655.	ELECTRICAL WORK (Installation of AVI Antennas)	SP-98
655.	ELECTRICAL WORK (Installation of AVI Reader)	SP-99
655.	ELECTRICAL WORK (AWG Wire)	SP-100
655.	ELECTRICAL WORK (4 pr/24 (Category 5e) Cable)	SP-101
655.	ELECTRICAL WORK (LMR 400 Cable)	SP-102
655.	ELECTRICAL WORK (Fiber Optic Cable)	SP-103

SECTION	TITLE	PAGE
655.	ELECTRICAL WORK (Fiber Optic Splice Panel)	SP-106
655.	ELECTRICAL WORK (3 Inch Schedule 80 PVC Conduit) (4 Inch Schedule 80 PVC Conduit)	SP-107
655.	ELECTRICAL WORK (Install Communications Cabinet (Provided by MTA))	SP-108
655.	ELECTRICAL WORK (Install Communications Cabinet (Provided by Contractor))	SP-109
655.	ELECTRICAL WORK (P44 NEMA 3R Cabinet)	SP-110
655.	ELECTRICAL WORK (60 AMP Panelboard Cabinet)	SP-112
655.	ELECTRICAL WORK (Removal of Existing Select Toll Equipment)	SP-113
655.	ELECTRICAL WORK (Lightning Suppression System)	SP-114
655.	ELECTRICAL WORK (Utility Building Generator)	SP-117
655.	ELECTRICAL WORK (Generator Automatic Transfer Switch)	SP-124
655.	ELECTRICAL WORK (Generator and Equipment)	SP-128
655.	ELECTRICAL WORK (Utility Building Electrical)	SP-130
800.	UTILITY BUILDING	SP-152
830.	HORIZONTAL DIRECTIONAL DRILLING (3” HDPE Conduit Installation	SP-156

PART III – APPENDICES

SECTION	TITLE	PAGE
APPENDIX A -	ENVIRONMENTAL PERMITS	AP - A1
APPENDIX B -	MS4 FORMS	AP - B1
APPENDIX C -	DEFINED TERMS	AP - C1
APPENDIX D -	PLAZA WORK CHECKLIST	AP – D1
APPENDIX E -	POWER PANEL SCHEDULES	AP – E1

MAINE TURNPIKE AUTHORITY

SPECIFICATIONS

PART II - SPECIAL PROVISIONS

All work shall be governed by the Maine Department of Transportation Standard Specifications, Revision of November 2014, except for that work which applies to sections of the Maine Department of Transportation Standard Specifications which are amended by the Maine Turnpike Supplemental Specifications and the following modifications, additions and deletions.

General Description of Work

The work at Exit 75 includes toll system upgrades, installation of a precast utility building, stream relocation, culvert sliplining as well as installation of a precast utility building and toll system upgrades at Exit 25, and a directional bore at Exit 19. The Exit 75 work includes relocating the northbound on and off ramp toll zones (mast arms and toll equipment) to the tangent portion of the ramps, relocating the bridge mounted toll equipment to a proposed gantry to the east of the bridge; installing concrete roadway slabs for each relocated toll zone, and installation of all associated power and communications infrastructure needed to support the toll system upgrades.

Plans

The drawings included in these Contract Documents, and referred to as the Plans, show the general character of the work to be done under this Contract. They bear the general title "Maine Turnpike – Contract 2018.17 – Auburn - Exit 75 Toll System Upgrades and Stream Relocation – Kennebunk – Exit 25 Toll System Upgrades – Well – Exit 19 Directional Bore. The right is reserved by the Resident to make such minor corrections or alterations in the Plans as he deems necessary without change in the unit prices on the Schedule of Prices of the Proposal.

101.2 Definition

Holidays

The following is added after Memorial Day in the Supplemental Specifications:

Independence Day 2018 (Fourth of July)	12:01 p.m. (Noon) preceding Tuesday to 6:00 a.m. the following Thursday.
Christmas 2018	12:01 p.m. (Noon) preceding Friday to 6:00 a.m. the following Wednesday.
New Years 2019	12:01 p.m. (Noon) preceding Friday to 6:00 a.m. the following Wednesday.
Independence Day 2019 (Fourth of July)	12:01 p.m. (Noon) preceding Wednesday to 6:00 a.m. the following Friday.

103.4 Notice of Award

The following sentence is added:

The Maine Turnpike Authority Board is scheduled to consider the Contract Award on June 28, 2018.

104.3.8 Wage Rates and Labor Laws

Section 104.3.8 Wage Rates and Labor Laws has been amended as follows:

The fair minimum hourly rates determined by the State of Maine Department of Labor for this Contract are as follows:

THIS DOCUMENT MUST BE CLEARLY POSTED AT THE PERTAINING STATE FUNDED PREVAILING WAGE CONSTRUCTION SITE

State of Maine
Department of Labor
Bureau of Labor Standards
Augusta, Maine 04333-0045
Telephone (207) 623-7906

Wage Determination - In accordance with 26 MRSA §1301 et. seq., this is a determination by the Bureau of Labor Standards, of the fair minimum wage rate to be paid to laborers and workers employed on the below titled project.

Title of Project --------2018.17-Exit 25 Toll System Upgrades

Location of Project –Kennebunk, York County

2018 Fair Minimum Wage Rates
Heavy & Bridge York County

Occupation Title	Minimum Wage	Minimum Benefit	Total	Occupation Title	Minimum Wage	Minimum Benefit	Total
Backhoe Loader Operator	$20.00	$2.16	$22.16	Laborer (Includes Helper-Tender)	$16.50	$1.63	$18.13
Boom Truck (Truck Crane) Operator	$21.66	$6.86	$28.52	Laborer - Skilled	$21.00	$4.15	$25.15
Bricklayer	$24.00	$3.99	$27.99	Line Erector-Power/Cable Splicer	$25.75	$7.36	$33.11
Bulldozer Operator	$20.00	$4.06	$24.06	Loader Operator - Front-End	$21.00	$3.21	$24.21
Carpenter	$24.31	$10.58	$34.89	Mechanic- Maintenance	$20.00	$5.72	$25.72
Carpenter - Rough	$20.94	$4.46	$25.40	Mechanic- Refrigeration	$24.88	$4.76	$29.64
Cement Mason/Finisher	$17.00	$0.56	$17.56	Millwright	$29.90	$23.69	$53.59
Communication Equipment Installer	$20.00	$1.85	$21.85	Painter	$22.00	$3.06	$25.06
Comm Transmission Erector Microwave & Cell	$19.00	$3.57	$22.57	Paver Operator	$20.00	$3.78	$23.78
Crane Operator =>15 Tons)	$29.00	$10.84	$39.84	Pile Driver Operator	$25.00	$11.13	$36.13
Crusher Plant Operator	$17.75	$2.48	$20.23	Pipe/Steam/Sprinkler Fitter	$22.25	$8.62	$30.87
Diver	$32.00	$0.00	$32.00	Pipelayer	$28.00	$12.54	$40.54
Driller -Rock	$18.38	$2.60	$20.98	Pump Installer	$21.00	$3.73	$24.73
Earth Auger Operator	$23.76	$6.31	$30.07	Reclaimer Operator	$18.50	$2.85	$21.35
Electrician - Licensed	$30.07	$17.09	$47.16	Rigger	$20.00	$6.12	$26.12
Electrician Helper/Cable Puller (Licensed)	$27.00	$12.01	$39.01	Roller Operator - Earth	$15.88	$1.76	$17.64
Excavator Operator	$23.25	$3.71	$26.96	Roller Operator - Pavement	$18.30	$1.64	$19.94
Fence Setter	$16.00	$1.17	$17.17	Truck Driver - Light	$18.15	$2.88	$21.03
Flagger	$12.00	$0.00	$12.00	Truck Driver - Medium	$17.75	$1.82	$19.57
Grader/Scraper Operator	$21.33	$5.13	$26.46	Truck Driver - Heavy	$19.00	$3.19	$22.19
HVAC (Heat-Vent-Air Conditioning)	$23.00	$3.05	$26.05	Truck Driver - Tractor Trailer	$20.50	$5.46	$25.96
Ironworker – Ornimental	$22.48	$4.85	$27.70				
Ironworker - Reinforcing	$26.20	$12.15	$38.35				
Ironworker - Structural	$23.00	$6.26	$29.26				

The Laborer classifications include a wide range of work duties. Therefore, if any specific occupation to be employed on this project is not listed in this determination, call the Bureau of Labor Standards at the above number for further clarification.

Welders are classified in the trade to which the welding is incidental.

Apprentices - The minimum wage rate for registered apprentices are those set forth in the standards and policies of the Maine State Apprenticeship and Training Council for approved apprenticeship programs.

Posting of Schedule - Posting of this schedule is required in accordance with 26 MRSA §1301 et. seq., by any contractor holding a State contract for construction valued at $50,000 or more and any subcontractors to such a contractor.

Appeal - Any person affected by the determination of these rates may appeal to the Commissioner of Labor by filing a written notice with the Commissioner stating the specific grounds of the objection within ten (10) days from the filing of these rates.

Determination No: **HB-038-2018** **A true copy**

Filing Date: **May 11, 2018** **Attest:** Scott A. Cotnoir

Scott A. Cotnoir
Wage & Hour Director

Expiration Date: **12-31-2018**

BLS(Heavy & Bridge York)

THIS DOCUMENT MUST BE CLEARLY POSTED AT THE PERTAINING STATE FUNDED PREVAILING WAGE CONSTRUCTION SITE

State of Maine
Department of Labor
Bureau of Labor Standards
Augusta, Maine 04333-0045
Telephone (207) 623-7906

Wage Determination - In accordance with 26 MRSA §1301 et. seq., this is a determination by the Bureau of Labor Standards, of the fair minimum wage rate to be paid to laborers and workers employed on the below titled project.

Title of Project -------- 2018.17-Exit 25 Toll System Upgrades and Exit 19 Directional Boring

Location of Project –Kennebunk and Wells, York County

2018 Fair Minimum Wage Rates
Highway & Earth York County-Revised-

Occupation Title	Minimum Wage	Minimum Benefit	Total	Occupation Title	Minimum Wage	Minimum Benefit	Total
Asphalt Raker	$16.00	$0.44	$16.44	Ironworker – Ornamental	$23.13	$4.80	$27.93
Backhoe Loader Operator	$20.00	$2.23	$22.23	Ironworker - Reinforcing	$24.79	$10.60	$35.39
Boom Truck (Truck Crane) Operator	$21.66	$6.86	$28.52	Ironworker - Structural	$21.80	$4.88	$26.68
Bulldozer Operator	$22.00	$4.17	$26.17	Laborer (Includes Helper-Tender)	$14.50	$0.94	$15.44
Carpenter	$21.00	$2.36	$23.36	Laborer - Skilled	$17.00	$2.24	$19.24
Cement Mason/Finisher	$17.00	$0.56	$17.56	Line Erector-Power/Cable Splicer	$26.00	$7.59	$33.59
Crane Operator =>15 Tons)	$26.00	$5.97	$31.97	Loader Operator - Front-End	$19.25	$3.37	$22.62
Crusher Plant Operator	$17.50	$2.01	$19.51	Mechanic- Maintenance	$21.00	$3.15	$24.15
Diver	$28.50	$1.48	$29.98	Painter	$17.00	$0.00	$17.00
Driller -Rock	$18.38	$2.60	$20.98	Paver Operator	$18.38	$1.73	$20.11
Earth Auger Operator	$22.97	$6.17	$29.14	Pipelayer	$18.00	$3.16	$21.16
Electrician - Licensed	$26.00	$4.67	$30.67	Pump Installer	$21.00	$3.73	$24.73
Electrician Helper/Cable Puller (Licensed)	$17.00	$2.84	$19.84	Reclaimer Operator	$19.13	$2.98	$22.11
Elevator Constructor/Installer	$19.25	$1.62	$20.87	Roller Operator - Earth	$16.00	$1.89	$17.89
Excavator Operator	$21.13	$3.36	$24.49	Roller Operator - Pavement	$18.03	$2.19	$20.22
Fence Setter	$17.25	$1.72	$18.97	Screed/Wheelman	$18.60	$3.68	$22.28
Flagger	$12.00	$0.00	$12.00	Truck Driver - Light	$17.83	$3.74	$21.57
Grader/Scraper Operator	$21.33	$5.65	$26.98	Truck Driver - Medium	$18.00	$1.89	$19.89
Highway Worker/Guardrail Installer	$16.50	$0.79	$17.29	Truck Driver - Heavy	$16.38	$1.61	$17.99
Hot Top Plant Operator	$23.00	$3.90	$26.90	Truck Driver - Tractor Trailer	$19.00	$3.18	$22.18

The Laborer classifications include a wide range of work duties. Therefore, if any specific occupation to be employed on this project is not listed in this determination, call the Bureau of Labor Standards at the above number for further clarification.

Welders are classified in the trade to which the welding is incidental.

Apprentices - The minimum wage rate for registered apprentices are those set forth in the standards and policies of the Maine State Apprenticeship and Training Council for approved apprenticeship programs.

Posting of Schedule - Posting of this schedule is required in accordance with 26 MRSA §1301 et. seq., by any contractor holding a State contract for construction valued at $50,000 or more and any subcontractors to such a contractor.

Appeal - Any person affected by the determination of these rates may appeal to the Commissioner of Labor by filing a written notice with the Commissioner stating the specific grounds of the objection within ten (10) days from the filing of these rates.

Determination No: **HI-120-2018** **A true copy**

Filing Date: **May 11, 2018** **Attest:** Scott R. Cotnoir

Scott A. Cotnoir
Wage & Hour Director

Expiration Date: **12-31-2018**

BLS(Highway & Earth York)

THIS DOCUMENT MUST BE CLEARLY POSTED AT THE PERTAINING STATE FUNDED PREVAILING WAGE CONSTRUCTION SITE

State of Maine
Department of Labor
Bureau of Labor Standards
Augusta, Maine 04333-0045
Telephone (207) 623-7906

Wage Determination - In accordance with 26 MRSA §1301 et. seq., this is a determination by the Bureau of Labor Standards, of the fair minimum wage rate to be paid to laborers and workers employed on the below titled project.

Title of Project --------2018.17-Exit 75 Toll System Upgrades, Slope Repair and Stream Relocation

Location of Project –Auburn, Androscoggin County

2018 Fair Minimum Wage Rates
Highway & Earth Androscoggin County

Occupation Title	Minimum Wage	Minimum Benefit	Total	Occupation Title	Minimum Wage	Minimum Benefit	Total	
Asphalt Raker	$17.13	$0.58	$17.71	Ironworker – Ornamental	$23.13	$4.80	$27.93	
Backhoe Loader Operator	$20.00	$2.23	$22.23	Ironworker - Reinforcing	$24.79	$10.60	$35.39	
Boom Truck (Truck Crane) Operator	$21.66	$6.86	$28.52	Ironworker - Structural	$21.80	$4.88	$26.68	
Bulldozer Operator	$22.60	$4.55	$27.15	Laborer (Includes Helper-Tender)	$14.50	$0.95	$15.45	
Carpenter	$21.00	$2.36	$23.36	Laborer - Skilled	$17.00	$2.29	$19.29	
Cement Mason/Finisher	$17.00	$0.56	$17.56	Line Erector-Power/Cable Splicer	$26.00	$7.59	$33.59	
Crane Operator =>15 Tons)	$26.00	$5.97	$31.97	Loader Operator - Front-End	$19.00	$3.13	$22.13	
Crusher Plant Operator	$17.50	$2.01	$19.51	Mechanic- Maintenance	$20.75	$2.95	$23.70	
Diver	$28.50	$1.48	$29.98	Painter	$17.00	$0.00	$17.00	
Driller -Rock	$18.38	$2.60	$20.98	Paver Operator	$19.57	$5.27	$24.84	
Earth Auger Operator	$22.97	$6.17	$29.14	Pipelayer	$18.00	$3.16	$21.16	
Electrician - Licensed	$26.00	$4.67	$30.67	Pump Installer	$21.00	$3.73	$24.73	$
Electrician Helper/Cable Puller (Licensed)	$17.00	$2.84	$19.84	Reclaimer Operator	$19.13	$2.98	$22.11	
Elevator Constructor/Installer	$19.25	$1.62	$20.87	Roller Operator - Earth	$16.00	$1.89	$17.89	
Excavator Operator	$21.25	$3.43	$24.68	Roller Operator - Pavement	$18.00	$4.26	$22.26	
Fence Setter	$17.25	$1.72	$18.97	Screed/Wheelman	$18.60	$3.75	$22.35	
Flagger	$12.00	$0.00	$12.00	Truck Driver - Light	$17.25	$2.52	$19.77	
Grader/Scraper Operator	$21.33	$5.65	$26.98	Truck Driver - Medium	$18.00	$2.98	$20.98	
Highway Worker/Guardrail Installer	$16.50	$0.79	$17.29	Truck Driver - Heavy	$16.00	$1.92	$17.92	
Hot Top Plant Operator	$22.50	$3.83	$26.33	Truck Driver - Tractor Trailer	$19.00	$3.18	$22.18	

The Laborer classifications include a wide range of work duties. Therefore, if any specific occupation to be employed on this project is not listed in this determination, call the Bureau of Labor Standards at the above number for further clarification.

Welders are classified in the trade to which the welding is incidental.

Apprentices - The minimum wage rate for registered apprentices are those set forth in the standards and policies of the Maine State Apprenticeship and Training Council for approved apprenticeship programs.

Posting of Schedule - Posting of this schedule is required in accordance with 26 MRSA §1301 et. seq., by any contractor holding a State contract for construction valued at $50,000 or more and any subcontractors to such a contractor.

Appeal - Any person affected by the determination of these rates may appeal to the Commissioner of Labor by filing a written notice with the Commissioner stating the specific grounds of the objection within ten (10) days from the filing of these rates.

Determination No: **HI-119-2018** **A true copy**

Filing Date: **May 11, 2018** **Attest:** Scott R. Cotnoir

Scott A. Cotnoir
Wage & Hour Director

Expiration Date: **12-31-2018**

BLS(Highway & Earth Androscoggin)

THIS DOCUMENT MUST BE CLEARLY POSTED AT THE PERTAINING STATE FUNDED PREVAILING WAGE CONSTRUCTION SITE

State of Maine
Department of Labor
Bureau of Labor Standards
Augusta, Maine 04333-0045
Telephone (207) 623-7906

Wage Determination - In accordance with 26 MRSA §1301 et. seq., this is a determination by the Bureau of Labor Standards, of the fair minimum wage rate to be paid to laborers and workers employed on the below titled project.

Title of Project --------2018.17-Exit 75 Toll System Upgrades,Slope Repair and Stream Relocation

Location of Project –Auburn, Androscoggin County

2018 Fair Minimum Wage Rates
Heavy & Bridge Androscoggin County

Occupation Title	Minimum Wage	Minimum Benefit	Total	Occupation Title	Minimum Wage	Minimum Benefit	Total
Backhoe Loader Operator	$20.00	$2.16	$22.16	Laborer (Includes Helper-Tender)	$16.00	$1.72	$17.72
Boom Truck (Truck Crane) Operator	$21.66	$6.86	$28.52	Laborer - Skilled	$18.91	$3.48	$22.39
Bricklayer	$24.00	$3.99	$27.99	Line Erector-Power/Cable Splicer	$25.75	$7.13	$32.88
Bulldozer Operator	$20.00	$4.06	$24.06	Loader Operator - Front-End	$19.00	$2.39	$21.39
Carpenter	$20.85	$2.63	$23.48	Mechanic- Maintenance	$20.00	$3.58	$23.58
Carpenter - Rough	$20.50	$4.67	$25.17	Mechanic- Refrigeration	$24.88	$4.76	$29.64
Cement Mason/Finisher	$17.00	$0.56	$17.56	Millwright	$27.60	$22.03	$49.63
Communication Equipment Installer	$20.00	$2.03	$22.03	Painter	$20.75	$2.97	$23.72
Comm. Transmission Erector Microwave & Cell	$19.00	$3.57	$22.57	Paver Operator	$20.00	$3.78	$23.78
Crane Operator =>15 Tons)	$25.00	$5.49	$30.49	Pile Driver Operator	$25.00	$11.13	$36.13
Crusher Plant Operator	$17.75	$2.48	$20.23	Pipe/Steam/Sprinkler Fitter	$24.70	$5.55	$30.25
Diver	$32.00	$0.00	$32.00	Pipe Layer	$28.00	$12.54	$40.54
Driller -Rock	$18.38	$2.60	$20.98	Pump Installer	$21.00	$3.73	$24.73
Earth Auger Operator	$23.76	$6.43	$30.19	Reclaimer Operator	$18.50	$2.85	$21.35
Electrician - Licensed	$28.55	$10.53	$39.08	Rigger	$20.00	$6.12	$26.12
Electrician Helper/Cable Puller (Licensed)	$23.89	$6.36	$30.25	Roller Operator - Earth	$15.88	$1.76	$17.64
Excavator Operator	$22.88	$3.67	$26.55	Roller Operator - Pavement	$18.30	$1.64	$19.94
Fence Setter	$16.00	$1.17	$17.17	Truck Driver - Light	$18.15	$2.88	$21.03
Flagger	$12.00	$0.00	$12.00	Truck Driver - Medium	$17.75	$1.82	$19.57
Grader/Scraper Operator	$21.33	$5.13	$26.46	Truck Driver - Heavy	$18.75	$2.40	$21.15
HVAC (Heat-Vent-Air Conditioning)	$23.00	$3.05	$26.05	Truck Driver - Tractor Trailer	$20.50	$5.46	$25.96
Ironworker – Ornamental	$22.85	$4.85	$27.70				
Ironworker - Reinforcing	$26.48	$11.83	$38.31				
Ironworker - Structural	$23.00	$6.26	$29.26				

The Laborer classifications include a wide range of work duties. Therefore, if any specific occupation to be employed on this project is not listed in this determination, call the Bureau of Labor Standards at the above number for further clarification.

Welders are classified in the trade to which the welding is incidental.

Apprentices - The minimum wage rate for registered apprentices are those set forth in the standards and policies of the Maine State Apprenticeship and Training Council for approved apprenticeship programs.

Posting of Schedule - Posting of this schedule is required in accordance with 26 MRSA §1301 et. seq., by any contractor holding a State contract for construction valued at $50,000 or more and any subcontractors to such a contractor.

Appeal - Any person affected by the determination of these rates may appeal to the Commissioner of Labor by filing a written notice with the Commissioner stating the specific grounds of the objection within ten (10) days from the filing of these rates.

Determination No: **HB-037-2018** **A true copy**

Filing Date: **May 11, 2018** **Attest:** Scott R. Cotnoir

Scott A. Cotnoir
Wage & Hour Director

Expiration Date: **12-31-2018**

BLS(Heavy & Bridge Androscoggin)

104.4.6 Utility Coordination

This Subsection is amended by the addition of the following:

These Special Provisions outline the arrangements which have been established by the Authority for coordination of the work to be accomplished by the utilities. The scope and schedule of utility relocation work is noted herein. The Contractor shall plan and conduct his work accordingly.

General

Utility working days are Monday through Friday, conditions permitting. Times are estimated on the basis of a single crew for each utility. Any times and dates mentioned are estimates only and are dependent upon favorable weather, working conditions, and freedom from emergencies. The Contractor shall have no claim against the Authority if they are exceeded.

The Contractor shall plan and conduct his operations in accordance with the following utility schedule. The Contractor must comply with all OSHA regulations pertaining to work adjacent to utility wires. The Contractor shall plan and conduct his work accordingly.

The following utilities are located within the Project limits. The Contractor shall ascertain the location of the existing utilities and any other necessary information by direct inquiry at the office of the following utility owners:

AERIAL UTILITIES

MAINE TURNPIKE AUTHORITY

CENTRAL MAINE POWER (CMP)

KENNEBUNK LIGHT AND POWER DISTRICT

CONSOLIDATED COMMUNICATIONS (FORMERLY FAIRPOINT COMMUNICATIONS)

SPECTRUM (FORMERLY TIME WARNER CABLE)

UNDERGROUND UTILITIES

Same info as for Aerial Utilities

104.4.7 Cooperation With Other Contractors

This Subsection is amended by the addition of the following:

Adjacent contracts currently scheduled for the 2018 construction season include:

2018.12 - Pavement Rehabilitation, Guardrail, Drainage, & Clear Zone Improvements MM 74.9 TO MM 80.7

105.8.2 Permit Requirements

The Exit 75 portion of the project that is being constructed is being permitted through Section 404 of the Clean Water Act, through the US Army Corps of Engineers Programmatic General Permit, Category 2. The Project is subject to the General Conditions of the Category 2 Authorization dated October 13, 2015 through October 13, 2020. A copy of the General Permit is attached in **Appendix A,** along with a copy of the signed permit for the project. A signed copy of the Category 2 Work Start Notification Form must be sent to the Army Corps Maine Project Office at least two (2) weeks before work commences. The Contractor must abide by all of the conditions of the permit.

The permit expands the in-water work window for all project site streams by allowing in-water work within a July 15 to October 31 timeframe.

The Project is also being permitted through the Maine Department of Environmental Protection (DEP) Individual Stream Permit. A signed copy of the permit is forthcoming so is NOT included in **Appendix A**.

Final permit authorization is anticipated by July 15, 2018. A change order will be issued acknowledging the permit; providing the actual DEP permit conditions; and providing Plan and Specification changes (if required) to adjust the Project schedule or phasing to meet the permit requirements. Impacts to wetland or streams are not allowed until a;; permits have been recieved

The Project is subject to the requirements of the Maine Pollutant Discharge Elimination System (MPDES) General Permit for Stormwater Discharge from Construction Activity, as promulgated by the US Environmental Protection Agency (US EPA) and Administrated by the Maine Department of Environmental Protection (DEP).

A Notice of Intent (NOI), accompanied by a preliminary Limit of Disturbance (LOD) plan was submitted by the Authority to the DEP for coverage under the Maine Construction General Permit (MCGP). Compliance with the erosion and sedimentation control requirements outlined in this Contract is required by the Contractor.

The Contractor shall prepare a LOD plan illustrating the Contractor's proposed limit of earthwork disturbance. The LOD plan shall show all construction access locations, field office locations, material and temporary waste storage locations, as well as include the Contract limits of earthwork disturbance. All applicable erosion and sedimentation control devices needed shall be detailed on the Contractor's LOD plan and are not limited to those devices shown on the Contract LOD plan. **This Plan shall be submitted for review and approval, to the Resident within 14 days of Contract award.** Payment for creating, revising, and completing this plan shall be incidental to Item 659.10, Mobilization.

The LOD for this Contract, which were submitted as part of the NOI, has been estimated to be **4.44** acres.

At any time during the Contract, if the Limit of Disturbance needs to be adjusted to accommodate construction activities, the Contractor shall resubmit the LOD plan (including any additional erosion and sedimentation control measures needed) to the Resident for review and approval prior to any additional disturbance taking place:

- If the cumulative area of disturbance exceeds the estimated LOD noted above, by less than one acre, the Resident shall have a minimum of five (5) working days to approve the revised LOD plan.
- If the cumulative area of disturbance exceeds the estimated LOD noted above, by over one acre, the Resident shall first approve of the plan and then possibly resubmit the NOI for MaineDEP approval. The approval may take a minimum of 21 working days.

Compliance with the erosion and sedimentation control requirements outlined in this Contract is required by the Contractor.

The Contractor shall comply with the conditions outlined in the Army Corps General Permit, Maine Department of Environmental Protection NRPA Category 2, the US Army Corps of Engineers General Permit, and the Maine Pollutant Discharge Elimination System General Permit for stormwater discharge associated with construction activity. The Contractor shall indemnify and hold harmless the Maine Turnpike Authority or its agents, representatives and employees against any and all claims, liabilities or fines arising from or based on the violation of the above noted permits.

The Contractor shall comply with the conditions outlined in the Maine Pollutant Discharge Elimination System (MPDES) General Permit for stormwater discharge associated with construction activity. The Contractor shall indemnify and hold harmless the Maine Turnpike Authority or its agents, representatives and employees against any and all claims, liabilities or fines arising from or based on the violation of the above noted permit.

This Project is also subject to the requirements of the Maine Pollutant Discharge and Elimination System (MPDES) General Permit for the Discharge of Stormwater from MTA's Municipal Separate Storm Sewer Systems (MS4), because it is located within an Urbanized Area (UA) as defined by the 2000 census by the U.S. Bureau of the Census. MS4 compliance requires all Contractors to be properly trained in Erosion and Sedimentation Control (ESC) measures (as per Supplemental Specification Subsection 656.07) and implement measures to reduce pollutants in stormwater runoff from construction activities. MS4 forms are included in Appendix B

105.8.3 Wetland and Water Body Impacts

The following locations are classified as streams:

Unnamed Stream	Exit 75 Ramp A and Ramp D

Prior to starting work, the Contractor shall submit for approval a detailed construction plan for each temporary stream relocation. The plan shall outline the schedule, erosion control plan, dewatering plan, equipment, and materials the Contractor will utilize to construct the culvert extensions/slipline and stream relocation constructions in accordance with the Plans. Work in these areas will not be allowed to start until after the Contractor has demonstrated that he has the necessary equipment, material, and manpower to complete the slipline/relocation in a logical and timely manner. The Resident will review the plan to assure that the Contractor is constructing the

slipline/relocation in accordance with the Contract Documents and permit requirements. The Contractor shall complete the stream slip/line/relocation in a timely manner.

107.1 Contract Time and Contract Completion Date

This Subsection is amended by the addition of the following:

All work shall be completed on or before June 1, 2020. The construction of 2018.17 shall be substantially complete by October 31, 2019.

107.1.1 Substantial Completion

This Subsection is amended by the addition of the following:

Substantially complete shall be defined by the Authority as the following:

- All work completed except punch list items and grass growth.

Supplemental Liquidated damages on a calendar day basis in accordance with Subsection 107.8 of the MTA Supplemental Specifications shall be assessed for each calendar day that substantial completion is not achieved.

107.4.6 Prosecution of Work

The following activities must be completed by the date specified:

- The construction of all stream relocation work shall be completed between July 15th (or permit issuance dates) and October 31, 2018 and the same dates for 2019.

The Contractor shall submit to the Authority a construction schedule which shall document that the Contractor has the necessary labor and equipment to work immediately and continuously at the project site.

107.4.7 Limitations of Operations

The Contractor shall be aware that the maintenance of traffic plans within the plan set are for each individual phase of work, and are not intended for concurrent phase construction. If the contractor chooses to construct phases simultaneously, additional traffic control will be needed; any additional Maintenance of Traffic details necessary for concurrent construction shall be submitted for approval.

Ramp A shall be constructed in the following sequence:

- Construct southbound off-ramp shoulder widening
- Construct southbound on-ramp shoulder widening, install concrete toll slab, and install guardrail
- Install southbound off-ramp concrete toll slab and guardrail
- Install toll gantry and foundations

Between November 15th and April 15th all lanes and shoulders shall be fully opened to traffic and all temporary concreate barrier shall be removed with guardrail in place where required.

Once stream relocation work has starts, that work cannot stop until stream relocation is complete.

SPECIAL PROVISION

SECTION 401

HOT MIX ASPHALT PAVEMENT

Section 401 of the Maine Turnpike Authority 2016 Supplemental Specifications is modified as follows:

401.01 Description

The following paragraph is added:

A Quality Control Plan(QCP) is required.

401.02 Materials

Section 401.02 is deleted in its entirety and replaced with the following:

Aggregates for HMA Pavements Coarse Aggregate and fine aggregate for HMA pavements shall be graded such that when combined in the proper proportions, including filler if required, the resultant blend will meet the composition of mixture for the type of pavement specified. Materials shall meet the requirements specified in Section 700 – Materials:

Asphalt Cement	702.01
Aggregates for HMA Pavement	703.07
RAP for HMA Pavement	703.08
HMA Mixture Composition	703.09

Surface HMA Coarse aggregate: The material retained on the No. 4 sieve, shall consist of angular fragments obtained from crushed quarry stone and be free of dirt or other objectionable materials. Coarse aggregate shall have a Micro-Deval value of 16.0 percent or less as determined by AASHTO T 327. The crushed stone shall have a maximum of 1.5% material finer than the No. 200 mesh when tested in accordance with AASHTO T-11. Flat and elongated particles shall not exceed a maximum of 8% at a 5:1 ratio in accordance with ASTM D-4791. Coarse aggregate angularity shall be a minimum of 95/90 in accordance with AASHTO T-335.

Surface HMA Fine aggregate: The material passing the No. 4 sieve, shall be crushed manufactured sand free from dirt, clay balls, or other objectionable material. Natural sand may be incorporated into the mix at a rate no greater than 13 percent by weight of total aggregate. The unconfined void content of the fine aggregate blend shall be a 45 minimum value when tested in accordance with AASHTO T-304, method A. AASHTO T-176 sand equivalent value shall be 45 minimum.

Asphalt Low Modulus Joint Sealer: Asphalt Low Modulus Joint Sealer shall be a modified asphalt and rubber compound designed for sealing and improving the strength and performance of the base asphalt cement and shall conform to ASTM D6690 Type IV and the following specifications:

Cone Penetration	90-150
Flow @ 60°C [140ºF]	3.0mm [1/8 in] max
Bond, non-immersed	Three 12.7mm [½ in] specimens pass 3 cycles @ 200% extension @ -29°C [-20ºF]
Resilience, %	60 min
Asphalt Compatibility, ASTM D5329	pass*

* There shall be no failure in adhesion, formation of any oily exudate at the interface between the sealant and asphaltic concrete or other deleterious effects on the asphaltic concrete or sealant when tested at 60°C [140ºF].

The contractor shall provide the Resident or authorized representative with a copy of the material manufacturer's recommendations pertaining to heating, application, and reheating prior to the beginning of operations or the changing of materials.

Section 401.03 Composition of Mixtures

Section 401.03 is deleted in its entirety and replaced with the following:

The Contractor shall compose the Hot Mix Asphalt Pavement with aggregate, Performance Graded Asphalt Binder (PGAB), and mineral filler if required. HMA shall be designed and tested according to AASHTO R35 and the volumetric criteria in Table 1. The Contractor shall size, uniformly grade, and combine the aggregate fractions in proportions that provide a mixture meeting the grading requirements of the Job Mix Formula (JMF). The Contractor may use a maximum of 15 percent reclaimed asphalt pavement (RAP) in any base, binder, surface, or shim course, unless otherwise noted. Current MaineDOT approved designs will be allowed on local roads.

The Contractor shall submit a job mix formula (JMF) developed for each specified mixture at least 30 days prior to placement.

The JMF shall establish a single percentage of aggregate passing each sieve size within the limits shown in Subsection 703.09. The mixture shall be designed and produced, including all production tolerances, to comply with the allowable control points for the particular type of mixture as outlined in Subsection 703.09. The JMF shall state the original source, gradation, and percentage to be used of each portion of the aggregate and mineral filler if required. It shall also state the proposed PGAB content, the name and location of the refiner, the supplier, the source of PGAB submitted for approval, the type of PGAB modification if applicable, and the location of the terminal if applicable.

In addition, the Contractor shall provide the following information with the proposed JMF:

- Properly completed JMF indicating all mix properties (Gmm, VMA, VFB, etc.).
- Stockpile Gradation Summary.
- Individual aggregate consensus properties
- Design Aggregate Structure Consensus Property Summary.
- Design Aggregate Structure Trial Blend Gradation Plots (0.45 power chart).
- Trial Blend Test Results for at least three different aggregate blends.
- Selected design aggregate blend.
- Test results for the selected design aggregate blend at a minimum of three binder contents.
- Test results for final selected blend compacted to $N_{max.}$
- Specific Gravity and temperature/viscosity charts for the PGAB to be used.
- Recommended mixing and compaction temperatures from the PGAB supplier.
- Material Safety Data Sheets (MSDS) For PGAB.
- Asphalt Content vs. Air Voids trial blend curve.
- Test report for Contractor's Verification sample.
- Summary of RAP test results (if used), including count, average and standard deviation of binder content and gradation.

At the time of JMF submittal, the Contractor shall identify and make available the stockpiles of all proposed aggregates at the plant site. There must be a minimum of 150 ton for stone stockpiles, 75 ton for sand stockpiles, and 50 ton of blend sand before the Authority will sample. The Authority shall obtain samples for laboratory testing. The Contractor shall also make available to the Authority the PGAB proposed for use in the mix in sufficient quantity to test the properties of the asphalt and to produce samples for testing of the mixture. Before the start of paving, the Contractor and the Authority shall split a production sample for evaluation. The Contractor shall test its split of the sample and determine if the results meet the requirements. If the results are found to be acceptable, the Contractor will forward their results to the Authority's Lab, which will test the Authority's split of the sample. The results of the two split samples will be compared and shared between the Authority and the Contractor. If the Authority finds the mixture acceptable, an approved JMF will be forwarded to the Contractor. The Authority will then notify the Contractor that paving may commence. The first day's production shall be monitored, and the approval may be withdrawn if the mixture exhibits undesirable characteristics such as checking, shoving or displacement. The Contractor shall be allowed to submit aim changes within

24 hours of receipt of the first Acceptance test result for an individual JMF. Adjustments will be allowed of up to 2% on the percent passing the 2.36 mm sieve through the 0.075 mm and 3% on the percent passing the 4.75 mm or larger sieves. Adjustments will be allowed on the %PGAB of up to 0.2 percent. Adjustments will be allowed on GMM of up to 0.010.

The Contractor shall submit a new JMF for approval each time a change in material source or materials properties is proposed. The same approval process shall be followed. The cold feed percentage of any aggregate except natural sand may be adjusted up to 10 percentage points from the amount listed on the JMF, however no aggregate listed on the JMF shall be eliminated. Natural sand may be adjusted up to 5 percent from the amount listed on the JMF but shall not exceed 13% by weight of total aggregates. The cold feed percentage for RAP may be reduced up to five percentage points from the amount listed on the JMF and shall not exceed the percentage of RAP approved in the JMF or for the specific application.

TABLE 1
VOLUMETRIC DESIGN CRITERIA

Design ESAL's (Millions)	Required Density (Percent of G_{mm})			Voids in the Mineral Aggregate (VMA)(Minimum Percent) Nominal Maximum Aggregate Size (mm)					Voids Filled with Binder (VFB) (Minimum %)	Fines/Eff. Binder Ratio
	$N_{initial}$	N_{design}	N_{max}	25	19	12.5	9.5	4.75		
10 to <30	≤89.0	96.0	≤98.0	13.0	14.0	15.0	16.0	16.0	65-80*	0.6-1.2

** For 9.5 mm nominal maximum aggregate size mixtures, the maximum VFB is 82.*

** For 4.75 mm nominal maximum aggregate size mixtures, the maximum VFB is 84.*

** For 4.75mm nominal maximum aggregate size mixtures, the Fines/Effective Binder Ratio is 0.6-1.4*

As part of the JMF submittal, there are Hamburg Wheel Tracker requirements, the Contractor shall provide the Authority the test results in accordance with AASHTO T324. The results shall be generated by a third party independent testing laboratory as approved by the Authority. The test results shall meet the requirements of Table 1A

TABLE 1A
HAMBURG WHEEL TRACKER REQUIREMENTS

Specified PG Binder Grade	Test Temperature (ºC)	Maximum Rut Depth (mm)	Minimum Number of Passes	Minimum Allowable SIP*
64-28	45	12.5	20,000	15,000
64E-28	45	8.0	20,000	15,000

* As calculated by the most recently published version of the Maine DOT HWT worksheet, which is available online at http://www.maine.gov/mdot/contractors/publications/

Section 401.091 Material Transfer Vehicle (MTV)

The fourth paragraph shall be deleted and replaced with:

The MTV shall be designed so that the mix receives additional mixing action.

Section 401.165 Longitudinal Joint Density

The first paragraph shall be deleted and replaced with:

When noted in Special Provision Section 403, the Authority will measure the pavement density of longitudinal joints between adjoining mainline travel lanes in both the unconfined and confined condition as determined by the days paving operation.

The eighth paragraph shall be deleted and replaced with:

The minimum density of the completed pavement shall be 91.5 percent of the theoretical maximum density obtained. Two consecutive failing tests shall result in production shut down. Prior to resuming paving operations, the contractor quality control unit shall satisfy the Authority that the paving operation will produce joint densities in compliance with the Specifications.

The eleventh paragraph and associated table shall be deleted and replaced with:

Payment reduction will be applied to each sublot that has a density lower than 91.5% as outlined below.

PERCENT COMPACTION	PERCENT PAY
91.5 or greater	100
90.0 to 91.4	95
89.9 or less	90

Section 401.17 Joints

The fourth paragraph shall be deleted and replaced with:

When required by Special Provision Section 403, Mainline Longitudinal joints shall be constructed as notched-wedge joint and constructed in a manner that will best ensure joint integrity.

Section 401.191 Inspection/Testing

In paragraph nine delete and replace Item #8 with:

8. Secure High Speed Internet Access

SPECIAL PROVISION

SECTION 403

HOT MIX ASPHALT PAVEMENT

403.01 Description

This work shall also consist of the installation of 12.5mm hand placed incidental hot mix asphalt pavement at locations as shown on the Plans or as directed by the Resident.

403.04 Method of Measurement

The construction and removal of temporary ramps on sand joints, and maintaining the ramps will not be measured separately for payment, but shall be incidental to Items 403.

The removal of sand and loose debris will not be measured separately for payment, but shall be incidental to paving items.

Hot Mix Asphalt, 12.5 mm Nominal Maximum Size (sidewalks, drives, islands & incidentals), will be measured under Item 403.2084 Hot Mix Asphalt, 12.5 mm Nominal Maximum Size (sidewalks, drives, islands & incidentals).

403.05 Basis of Payment

Hot Mix Asphalt, 12.5 mm Nominal Maximum Size (sidewalks, drives, islands & incidentals), will be paid under Item 403.2084 Hot Mix Asphalt, 12.5 mm Nominal Maximum Size (sidewalks, drives, islands & incidentals).

The following pay items are added:

Pay Item		Pay Unit
403.2084	Hot Mix Asphalt, 12.5 mm Nominal Maximum Size (sidewalks, drives, islands & incidentals)	Ton

SPECIAL PROVISION

SECTION 403

HOT MIX ASPHALT PAVEMENT

Course	HMA Grading	Item Number	Total Thickness	No. of Layers	Complimentary Notes
Exit 75 Interchange Ramps					
Wearing	**12.5mm**	**403.208**	**1.5”**	**1**	**B,C,E,J,L,N**
Intermediate	**12.5mm**	**403.213**	**1. 5”**	**1**	**B,E,J,L,N**
Base	**12.5mm**	**403.213**	**2.5”**	**1**	**B,E,J,L,N**
Incidentals	**12.5mm**	**403.2084**	**1.5”**	**2**	**B,E,J,L,N**
Shim	**4.75mm**	**403.212**	**½”**	**1**	**B,E,J,L,N**

COMPLEMENTARY NOTES

A. The required PGAB for this mixture shall be **64E-28.**
B. The required PGAB for this mixture shall be **64-28.**
C. A maximum of 15 percent RAP may be used.
D. RAP may not be used.
E. The Maine DOT will conduct the job mix verification. The aggregate qualities shall meet the design traffic level of 3 to <10 million ESALS for mix placed under this contract. The design verification, Quality Control, and Acceptance tests for this mix will be performed at **75 gyrations**. (N design) Minimum and Maximum PGAB content shall not apply.
F. The MTA will conduct the job mix verification. The aggregate qualities shall meet the design traffic level of 10 to <30 million ESALS for mix placed under this contract. The design verification, Quality Control, and Acceptance tests for this mix will be performed at **75 gyrations**. (N design)
G. A material transfer vehicle (MTV) shall be used for the placement of Hot Mix Asphalt wearing surface on all roadways including acceleration and deceleration lanes and all ramps.
H. Joints shall be constructed as the “notched wedge” type in accordance with Subsection 401.17.
I. Joint density will be measured in accordance with Subsection 401.165.
J. Tack coat shall be applied between all layers of pavement at a rate of 0.04 G/SY.
K. PGAB shall conform to the provisions of 403.02 – Polymer Modified PGAB for HMA
L. The contractor shall furnish a quality control technician equipped with an approved densometer to ensure density requirements are met.
M. Hydrated Lime shall be incorporated into the mixture.
N. No vehicular loads shall be permitted on newly completed pavement until adequate stability has been attained and the material has cooled sufficiently to prevent distortion or loss of fines. The newly paved area may be opened to traffic after the internal temperature of the pavement has cooled to 120° F. The Resident will test the internal temperature of the pavement and shall be the sole judge as to the opening to traffic. The period of time before opening to traffic may be extended at the discretion of the Resident. The lane closure may not be removed until the internal temperature has cooled to 120° F.

SPECIAL PROVISION

SECTION 409

BITUMINOUS TACK COAT

409.02 Bituminous Material

This Subsection is deleted and replaced with the following:

Bituminous material shall conform to the Specifications for Emulsified Asphalt RS-1h, of the AASHTO Designation M-140.

409.05 Equipment

Add "or as determined by the Resident", after the words "gal/yd^2]" in the fourth line of the second paragraph of this Subsection.

409.06 Preparation of Surface

The following paragraph is added:

All existing pavement and shoulder areas on which bituminous concrete mixtures are to be placed shall receive a tack coat. The surface area where the tack coat is to be applied shall be dry and cleaned of all dirt, sand, and loose material. Cleaning shall be accomplished by use of revolving brooms or mechanical sweepers. Undesirable material not removed by the above means shall be cleaned by hand sweeping or scraping, or a combination of both. Small areas otherwise inaccessible may be swept with hand brooms. The tack coat shall be applied only when the existing surface is dry.

409.08 Method of Measurement

The following paragraphs are added:

Measurement will be based on delivery slips made out in duplicate by the Contractor and signed by the Resident, or his representative, at the point of delivery. One of these slips shall be retained by the Resident and one by the Contractor. Delivery slips shall be furnished by the Contractor and shall provide space for identifying the vehicle and driver, for stating the volume of material carried, the source of the material, the date, and the Resident or his representative's signature.

Material included in the delivery slips and not used or rejected shall be deducted from the amount being measured for payment. Each day's delivery slips shall be reconciled by the Contractor and the Resident within 24-hours.

Cleaning of the surface area where tack coat is to be applied shall be incidental to Item 409.15, Bituminous Tack Coat - Applied.

409.09 Basis of Payment

The following pay items are added:

Pay Item		Pay Unit
409.15	Bituminous Tack Coat – Applied	Gallon

SPECIAL PROVISION

SECTION 419

SAWING AND SEALING JOINTS IN BITUMINOUS PAVEMENT

(Sawing Bituminous Pavement)

419.01 Description

This work consists of sawing bituminous concrete pavement as shown on the Plans, as specified herein or as approved by the Resident.

419.02 General

The bituminous concrete pavement to be sawed shall be accurately marked before cutting. The marking shall be in accordance with the locations as shown on the Plans or as approved by the Resident. Cutting shall be with an approved power driven saw with an abrasive blade.

Unless otherwise noted or directed, the sawcut shall be vertical, a minimum of 3/8 inch wide, and extend to the depth as shown on the Plans.

Residue or debris from the sawing operation shall be removed immediately and legally disposed of by the Contractor.

419.03 Method of Measurement

Sawing Bituminous Pavement will be measured by the linear foot of pavement actually cut and accepted. No additional payment will be made for variations in the pavement thickness.

419.04 Basis of Payment

Sawing Bituminous Pavement will be paid for at the Contract unit price per linear foot which shall be full compensation for all materials, tools, equipment labor, and all incidentals necessary for the completion of the work to the satisfaction of the Resident. The disposal of sawcut residue shall be incidental to this item.

Payment will be made under:

Pay Item		Pay Unit
419.30	Sawing Bituminous Pavement	Linear Foot

SPECIAL PROVISION

SECTION 502

STRUCTURAL CONCRETE

(Structural Concrete, Building Foundation and Generator Pad)
(Structural Concrete, Roadway Slab on Grade)

502.18 Method of Measurement

The following sentences are added:

A. The limits to be used in determining the quantities of the aforementioned structural concrete items will be as follows:

1. Structural Concrete, Building Foundations and Generator Pad. The limits will be the entire building foundation and generator pad bounded transversely and longitudinally by the extreme ends as per plans.

2. Structural Concrete, Pavement Slabs The limits will be the entire structural slab bounded transversely and longitudinally by the extreme ends as per plans.

502.19 Basis of Payment

The following sentences are added:

No direct payment will be made for concrete admixtures with the exception of Synthetic Fiber Reinforcement, which shall be paid for under its respective Pay Item, 503.90.

Steel reinforcing and GFRP reinforcing will be measured and paid for separately as outlined in Section 503.

Payment will be made under:

Pay Item		Pay Unit
502.2611	Structural Concrete, Building Foundation and Generator Pad	Cubic Yard
502.262	Structural Concrete, Roadway Slab on Grade	Cubic Yard

SPECIAL PROVISION

SECTION 503

REINFORCING STEEL

(GFRP Reinforcing)

503.01 Description

The first paragraph is amended to read:

This work shall consist of fabrication, delivery and placing glass fiber reinforced polymer (GFRP) reinforcement in accordance with these Specifications and in conformance with the Plans, General Provisions and Special Provisions.

503.02 Materials

The following paragraphs are added:

Materials shall meet the following requirements:

All GFRP reinforcement shall conform to the requirements shown in AASHTO Bridge Design Guide Specifications for GFRP- Reinforced Concrete Bridge Decks and Traffic Railings (November 2009), except as shown on the plans, and as stated herein. All GFRP reinforcement bar shall be deformed or sand coated.

GFRP bars shall be from one of the following approved manufacturers:

- Aslan 100 by Hughes Brothers Inc.
- V-Rod by Pultrall Inc.
- ComBAR by Schoeck Bauteile,
- Mateen-Bar by Sigma Development Group, LLC

All GFRP bars in the same structural component shall be supplied by the same manufacturer.

Documentation

For all GFRP reinforcement bar used on Authority projects, the bar manufacturer shall furnish the Resident with two (2) copies of written certifications that the GFRP reinforcement meets the requirements of this specification. In addition, the certification shall list the test values and test procedures used to determine the physical properties of the GFRP reinforcement. Certifications bearing the notarized signature of a responsible authorized representative of the bar manufacturer are required. Each bundle of GFRP reinforcement shall be identified with a corresponding lot number with the lot numbers affixed to each bundle by means of a durable tag.

Repair Material

The material used to repair the cut ends of GFRP reinforcement shall comply with the requirements established by the bar manufacturer.

503.04 Protection of Material

The following paragraphs are added:

Delivery, storage and handling of GFRP reinforcing bars shall be in accordance with these specifications. Prevent bending, coating with earth, oil, or other material, or otherwise damaging the reinforcement. When handling reinforcement, use equipment to avoid damaging or abrading the bar. Do not drop or drag reinforcement.

GFRP reinforcement shall be stored on skids or other supports a minimum of 12 inches above the ground surface and protected at all times from damage and surface contamination. The storage supports shall be constructed of wood, or other material that will not damage the surface of the reinforcement. Bundles of bars shall be stored on supports in a single layer. Each bundle shall be placed on the supports out of contact with adjacent bundles. Reinforcing bars expected to be stored outdoors for a period in excess of two months, shall be protected from ultraviolet radiation. Prevent exposure of reinforcing to temperatures above 120 degrees Fahrenheit during storage.

All handling of reinforcing bars by mechanical means shall be done by equipment having padded contact areas, or by the use of nylon webbing slings. The use of chains or wire rope slings shall not be allowed, even when used with padding. All bundles of bars shall be lifted with a strong back, spreader bar, multiple supports or a platform bridge to prevent bar-to-bar abrasion from sags in the bundles. Support points during lifting or transporting of bundled reinforcing bars shall be spaced at a maximum of 15 feet, or as required by the manufacturer, whichever is more restrictive.

Bundled bars shall be strapped together with non-metallic or padded straps in a manner to prevent bar-to-bar abrasion due to relative movement between bars.

Bars loaded for transport shall be loaded and strapped down in a manner that will prevent damage from motion and vibration, to the greatest extent possible. Bundles of bent bars shall be transported strapped to wooden platforms or shall be crated. All individual bundles and layers of bundles shall be separated, and supported by dunnage.

Individual bars shall be handled in a manner that prevents damage due to abrasion or impact, and at no time shall any bar be moved by dragging over any surface, including other reinforcing bars. Sufficient personnel shall be assigned to assure compliance with the above.

For GFRP bars the maximum total visible damage permitted on each linear foot shall not exceed 2 percent of the surface area in that linear foot of bar. The depth of the permissible damage shall not exceed 0.04 inches.

503.06 Placing and Fastening

The following paragraphs are added:

All reinforcement shall be accurately placed in the positions shown on the plans and shall be firmly held there during the placing and setting of the concrete. Immediately before placing concrete the reinforcement shall be free from all foreign material which could decrease the bond between the reinforcing and concrete. Such foreign material shall include, but not be limited to: dirt, paint, oil, bitumen and dried concrete mortar.

Reinforcing bars within the formwork shall be secured to prevent movement during concrete placement. The bars must be adequately supported or tied to resist settlement, floating upward, or movement in any direction during concrete placement.

Field bending of GFRP shall not be allowed.

Field cutting of GFRP will be permitted only with the approval of the Resident. The field cutting shall be with a high speed cutter, fine blade saw, diamond blade or masonry saw. The GFRP bars shall not be shear cut.

Proper distances from the forms shall be maintained by means of stays, blocks, ties, hangers or other approved means. Blocks used for this purpose shall be precast portland cement mortar blocks of approved shape and dimensions. Chairs may be used for this purpose and, when used, must be GFRP or plastic. The use of pebbles, pieces of broken stone or brick, metal pipe or wooden blocks shall not be permitted. The placing of reinforcement as concrete placement progresses, without definite and secure means of holding the bar in its correct position, shall not be permitted. Reinforcing bars used as support bars and spreader bars shall be the same type used for the main reinforcing.

Bars shall be fastened together at all intersections except where spacing is less than 1 foot in either direction, in which case, fastening at alternate intersections of each bar with other bars will be permitted providing this will hold all the bars securely in position. This fastening may be plastic or nylon ties only.

Minimum embedment lengths of reinforcing bars shall comply with the manufacturers published recommendations for the anchoring material selected. These embedment lengths shall be verified by the Resident before installation of the reinforcing bars. The reinforcing bar lengths indicated on the Plans may be reduced, at the Contractor's option, to the determined minimum embedment lengths.

Reinforcement shall be inspected and approved by the Resident before any concrete is placed.

503.07 Splicing

The following sentence is added:

Lap splice length for GFRP bars shall be as per manufactures recommendation.

503.10 Method of Measurement

The first sentence of the first paragraph is amended as follows:

GFRP reinforcing bars shall be measured by the computed number of pounds of reinforcement authorized.

503.11 Basis of Payment

The following is added:

The accepted quantity of GFRP reinforcing will be paid for at the Contract unit price per pound for each item involved, completed, and accepted.

Payment will be made under:

Pay Item		Pay Unit
503.18	Glass Fiber Reinforced Polymer (GFRP) Reinforcing Bars, Fabricated and Delivered	Pound
503.19	Glass Fiber Reinforced Polymer (GFRP) Reinforcing Bars, Placing	Pound

SPECIAL PROVISION

SECTION 503

REINFORCING STEEL

(Synthetic Fiber Reinforcement)

The following paragraphs shall be added:

503.01 Description

This work shall consist of furnishing synthetic fiber reinforcement to be used as temperature and shrinkage reinforcement in the concrete pavement slabs.

503.02 Materials

The following shall be added:

Synthetic fibers shall be STRUX 90/40 as manufactured by W. R. Grace & Co. or approved equal.

The following subsection shall be added:

503.03 Dosage

The dosage rate for synthetic fibers shall be 5 lb/cy.

503.04 Method of Measurement

The following shall be added:

Synthetic fiber reinforcement will be measured by the pound.

503.05 Basis of Payment

Payment will be made under:

Pay Item		Pay Unit
503.90	Synthetic Fiber Reinforcement	Pound

SPECIAL PROVISION

SECTION 504

STRUCTURAL STEEL

504.03 Drawings

This Subsection is amended by the addition of the following:

When structural steel erection is to take place over travel ways, the Contractor shall submit a structural steel erection plan stamped by a Professional Engineer licensed in the State of Maine. The erection plan shall include the number and location of crane(s), the weight of the pick, crane capacities, bracing locations and all other pertinent information needed to demonstrate the structural steel can be safely erected and assembled.

504.51 Installation

This Subsection is amended by the addition of the following:

Where an outer face of the bolted parts has a slope of more than one to 20 with respect to a plane normal to the bolt axis, a smooth beveled washer will be used to compensate for the lack of parallelism.

504.641 Method of Measurement

There will be no additional payment for the required erection plan. The cost shall be incidental to the Structural Steel Erection pay item.

SPECIAL PROVISION

SECTION 504

STRUCTURAL STEEL

(Toll Gantry)

504.01 Description

This work shall consist of the furnishing and installing materials and components to construct a new toll gantry over the exiting lanes at the Auburn Interchange as described in the Plan drawings.

800.52 Materials

This section is amended by the addition of the following:

Steel Supports	720.03
Anchor Bolts	720.07

All steel components shall be hot dip galvanized after fabrication.

800.53 Construction Requirements

The work in this item generally includes, but is not limited to construction of, or portions thereof, the a new Toll Gantry. The contractor shall install the proposed gantry over the existing exit lanes as shown in the Plans and described within these Specifications. The gantry installations shall include all electrical and communication for the toll system, with galvanized or stainless steel mounting hardware, and all materials, labor, equipment and incidentals required to complete the work

504.03 Drawings

This subsection is amended by the addition of the following:

Approval for deviations from the contract drawings and/or specifications shall be requested in writing and shall be approved by the Fabrication Engineer before being incorporated in the manufacturer's drawings. Requests for substitution of all specified material shall be submitted in writing, with full documentation (specifications, mill certification, etc.) enabling the Turnpike to evaluate the proposal.

Subsections 504.14 through 504.15 are deleted in their entirety and are not replaced.

504.16 Fabrication

The first sentence of the first paragraph of this section is deleted and replaced with the following:

Fabrication shall be in accordance with the AWS D1.1 *Structural Welding Code* (the D1.1 Code), as modified herein, and these Specifications.

504.17 Nondestructive Examination

All references to the "D1.5 Code" in this section are deleted and replaced with the "D1.1 Code".

504.26 Camber and Curvature

All references to the "D1.5 Code" in this section are deleted and replaced with the "D1.1 Code".

Subsections 504.28 through 504.29 are deleted in their entirety and are not replaced.

The following subsection is added:

504.28 Welding

All welding shall be completed in accordance with the D1.1

Code.

The following subsection is added:

504.29 Inspection of Welds

Weld inspection shall be completed in accordance with the D1.1 Code and these requirements.

Unless otherwise specified, all welds shall be inspected in accordance with Subsection 504.64.

The Contractor shall have the fabricator make his own inspection to maintain quality control. Such inspection shall comply with the D1.1 Code and shall be completed by AWS certified welding inspectors in accordance with the appropriate subsections thereof. All welds shall meet the "quality of welds" requirements specified in the sections on "Design of New Bridges" and "Tubular Structures" of the structural welding code.

All welds not meeting these quality requirements shall be repaired and/or replaced by the Contractor to meet these requirements and check tests, without additional cost to the Authority. The procedures, techniques, standards of acceptance, and methods of repair shall be in accordance with the requirements of AWS D1.1

a) All testing of welds, as herein required, shall be certified by a qualified laboratory engaged by the Contractor and approved by the Resident. The Contractor shall forward the certifications to the Resident and shall pay for all costs of weld inspection and certification as herein specified.

b) The Authority reserves the right to inspect by nondestructive testing techniques all welds and adjacent base metal as he deems warranted. All such additional testing shall be paid for by the Turnpike and at no cost to the Contractor.

Subsection 504.31 is deleted in its entirety and is not replaced.

504.32 Tolerances

This subsection is deleted and replaced with the following:

Before erection, the assembled structural steel shall not exhibit a sweep in excess of 0.2 percent of the nominal height or length, as measured with the element in a horizontal position.

Elements that do not conform to the sweep requirements shall be corrected with a method approved by the Engineer.

The following subsection is added:

504.401 General Construction requirements

The erection of steel structures shall be in accordance with the following:

a) The erection of toll gantries shall be in accordance with the erection procedure as described on the Plans, as approved by the Resident, and as specified herein.

b) Attention is directed to the maintenance and protection of traffic during work adjacent to or over active roadways. The Contractor is advised that any work on the erection of the toll gantries, or other work that might endanger traffic on active lanes, shall not be commenced until the proper lane closures have been made, or traffic slowdowns have been instituted, in accordance with the requirements of the Contract Documents.

c) Attention shall be paid to the erection procedure notes and field assembly requirements as shown on the plans. Strict conformance with these notes and procedures will be enforced at all times.

d) Under no circumstances shall the toll gantries be erected before the expiration of the curing period of all foundation concrete.

Subsections 504.57 and 504.6 are deleted in their entirety and are not replaced.

The following subsection is added:

504.641 Method of Measurement

Toll Gantry shall be measured as one lump sum, fabricated, delivered, erected and accepted.

Electrical and communication items associated with the toll system will be paid for under their respective pay items.

504.65 Basis of Payment

Payment shall include all labor, material, equipment, and incidentals required to complete the gantry installations in accordance with the plans and these specifications.

Payment will be made under:

Pay Item		Pay Unit
504.61	Toll Gantry	Lump Sum

SPECIAL PROVISION

SECTION 506

SHOP APPLIED PROTECTIVE COATING - STEEL

(Zinc Rich Coating System – Shop Applied)

506.05 Inspection

This section is amended by the addition of the following:

The QAI shall be given ample notice in order to inspect the product prior to coating, recoating or removal of paint from the area. "Ample notice" shall be defined at the Pre-Job meeting depending on shop or site conditions.

Substrates that are primed or surfaces that are recoated without notification of the QAI will be rejected and no further coating shall be done on the piece. Coating applied without notification of the QAI will be investigated by destructive and non-destructive testing as approved by the Resident and by a review of the JCR. The Resident may reject, conditionally accept, or accept the coating based on documentation and test results. Rejected coating shall be removed and re-applied. Conditionally accepted coatings shall be made acceptable as approved by the Resident. The cost of additional testing and repairs shall be borne by the Contractor.

At the completion of the shop coating the completion date (month and year), NTPEP System No. (provided on the NEPCOAT Qualified Products List), the type of coating system used (Inorgnic Zinc = IOZ, Organic Zinc = OZ), and top coat federal color number shall be stenciled on the inside of the fascia beams, at the locations designated by the Resident, in four inch letters and numbers (for example: 6/05, SSC(09)-01, IOZ, Fed Color #30045). The paint used for this marking shall be white or black (whichever provides greater contrast) polyurethane or such other paint as may be approved by the Resident.

506.11 Materials

This first paragraph is deleted and replaced with the following:

Coatings systems shall be from the Northeast Protective Coating Committee (NEPCOAT) Qualified Products List (QPL), list A. The list may be found through NEPCOAT's web page: http://www.nepcoat.org.

506.17 Handling and Storage

This section is amended by the addition of the following:

The coating shall be adequately cured before handling, but under no circumstances shall the product be handled before the coating has achieved the manufacturer's published minimum cure time.

Material shall not be loaded for shipment until the shop coating has adequately cured and been inspected and accepted. The components will be stamped "APPROVED" only after the loading has been completed and approved, and no material shall be shipped without the prior approval of the Resident.

SPECIAL PROVISION

SECTION 509

CULVERT SLIPLINE

509.01 Description

This work shall consist of furnishing a resin impregnated flexible tube that is pulled into the culvert and expanded to fit tightly against the culvert by the use of air pressure. The thermosetting resin system in the tube shall then be cured by exposing the resin saturated tube to a UV-light source that produces the needed intensity and wavelength of light to cause the photo-initiators in the resin to drive the hardening process to a complete cure.

This Work consists of furnishing all labor, tools, materials, equipment, and supervision for installing and testing of the culvert sliplining. The Work also includes, but is not limited to the bypass pumping/flow control, pipe cleaning, installation of a pre-liner, quality controls, quality assurance testing sampling.

509.02 Materials

Reference Standards:

A. The Reference Standards shown below shall be the most recent version available at the stated time of the bid opening.

B. American Society for Testing and Materials (ASTM)

ASTM C581 - Standard Practice for Determining Chemical Resistance of Thermosetting Resins Used in Glass Fiber Reinforced Structures, Intended for Liquid Service

ASTM D543- Standard Practices for Evaluating the Resistance of Plastics to Chemical Reagents

ASTM D790 - Standard Test Methods for Flexural Properties of Unreinforced and Reinforced Plastics and Electrical Insulating Materials

ASTM D5813 – Standard Specification for Cured-In-Place Thermosetting Resin Drain Pipe

ASTM F1216 - Standard Practice for Rehabilitation of Existing Pipelines and Conduits by the Inversion and Curing of a Resin-Impregnated Tube

ASTM F2019 - Standard Practice for Rehabilitation of Existing Pipelines and Conduits by the Pulled in Place Installation of Glass Reinforced Plastic (GRP) Cured-in-Place Thermosetting Resin Pipe (CIPP)

Warranty:

The Contractor shall warrant all Work for a period of one (1) year from the date of the acceptance of work by the Maine Turnpike Authority (the Authority).

Submittals:

A. The Contractor shall submit the following information a minimum of 30 days in advance of commencing the fabrication of the CIPP tubes for this project:

CIPP System Manufacturer's certification that the materials to be used on the project meet the appropriate qualifications based requirements of ASTM D5813 for the type CIPP System proposed. Included in this certification package shall be the Manufacturer's recommendations for the shipping, storage and handling of all the components of the CIPP System throughout the construction process; as well as the Manufacturer's recommended UV-light intensity level(s) and exposure times for the initiator cocktail used and the internal pressure(s) to be used throughout the various phases of the installation process.

CIPP System Manufacturer's product specific data for the resin and initiator cocktail system, including:

Resin trade name with formulation specific numbering.

Resin Infrared Spectrographic documentation.

Resin physical properties testing documentation; Short-term (Initial) Flexural Strength and the Short-term (Initial) and Time Dependent Flexural Modulus obtained in accordance with the appropriate ASTM Standard for the CIPP product being installed.

Material Safety Data Sheets (or MSDS).

CIPP System Manufacturer's product specific data for the glass fiber tube for this project; including the maximum allowable pulling force that will not damage the tube or compromise the physical properties of the finished CIPP.

Tube trade name with fabrication specific numbering

Finished CIPP physical properties testing documentation (results of the qualification based testing) using the resin system above with the proposed tube construction: Short-term (Initial) Flexural Strength and the Short-term (Initial) and Time Dependent Flexural Modulus in accordance with the appropriate ASTM standard.

System Manufacturer's CIPP product specific qualification-based testing to further verify the in ground performance requirements.

Strain Corrosion Resistance testing documentation using the resin system above for any CIPP product proposed that incorporates a fiber-reinforced tube construction; having a demonstrated minimum retention factor for the design life requirements contained later herein.

Chemical Corrosion Resistance testing documentation per paragraphs 6.4.1 and 6.4.2 of the ASTM standard D5813 for all types of CIPP construction.

Manufacturer's product specific information on the pre-liner or outer polymeric membrane (film) designed to encapsulate the resin system in the tube and provide for a water-tight, styrene emission abatement barrier on this project. Also included shall be specific information on the inner polymeric membrane, whether permanent or temporary, that is designed for the CIPP System's installation process which also has been designed to provide for the abatement of any styrene gas emission during the transportation and installation process.

The Manufacturer's product specific data and instructions for the end sealing materials to be used at the manholes (or other designated mainline access structures) to ensure a long-term, groundwater-tight connection between the host pipe and the new CIPP will be achieved. The sealing material must be shown in the product literature to be compatible with (or formulated for) the environmental service conditions of the pipe being lined and capable of serving for the design life of the CIPP liner installed.

Work Plan: Contractor's CIPP installation site plan including site layout, field verified reach lengths, equipment, access points, termination points for each reach, method of CIPP insertion (e.g. pulled-in-place), hardening method (e.g. UV light), traffic control devices, bypass plan, etc.

Design calculations for the reach specific wall thickness designs in accordance with accepted engineering design methodologies for the pipe geometry of the pipe structure. Calculations shall be completed and sealed by an engineer with a demonstrated proficiency in the design of CIPP (i.e. close-fit un-bonded liners) and licensed in the jurisdiction where the CIPP is to be installed. Calculations shall follow the CIPP Design Criteria described later herein.

1. Quality Control Plan (QCP) that includes the following:

   A checklist documenting each critical step in the tube's resin saturation process, unhardened CIPP tube's insertion into the subject reach of pipe, hardening (processing) of the CIPP, etc. This reach specific QCP checklist shall have provisions where each critical step is checked off and initialed by the Contractor's designated QCP personnel.

   A listing of the defined responsibilities of the key project personnel who are charged with ensuring that all the quality control requirements listed are met.

2. Emergency Plan that includes the following and shall be kept on site during the entire duration of active CIPP installation:

   The procedures that will be followed in event of a health and safety emergency, pump failure, drain overflows, service backups, and sewage spillage.

   Addresses the dangers associated with drain rehabilitation work.

   Identifies the on-site designated Health and Safety Officer.

   List of the rehabilitation equipment that shall be inspected on daily basis.

   Description of proposed methods and equipment to be used to repair unacceptable CIPP defects and for removing failed CIPP. These

shall be as developed by the CIPP System manufacturer to ensure that the required service life of the CIPP will still be achieved after the repair(s) is/are made. The Plan shall also include availability and accessibility of backup equipment such as air compressors, light train components, and lateral cutters.

3. Documentation of the Contractor's pre-construction inspection and post-construction inspection.

The Contractor shall submit to the engineer's on-site construction observer (inspector) the following information for each CIPP reach within fourteen (14) calendar days of installation of the CIPP:

1. Resin Saturation Documentation (Wet-out Report).
2. Hardening Documentation
    1. This documentation shall be in the form of a contemporaneous logging of the light intensity(s) and length of exposure time as the light train moves along the length of the subject reach of pipe. This log shall also be imprinted with the air pressure maintained inside of the liner during the hardening process. The data shall be recorded in a digital format that is tamper proofed.
3. Preliminary inspection of the installed CIPP liner clearly showing the fit and finish of the CIPP immediately after its completion.

The Contractor shall submit the following information prior to Final Acceptance:

1. Documentation demonstrating that the Quality Control Plan for each reach of CIPP installed was properly executed.
2. Documentation of the test results from the Quality Assurance samples taken of the installed CIPP demonstrating compliance with the Manufacturer's stated Short-term Flexural Strength and Flexural Modulus; and with the minimum finished wall thickness required by the Engineer of Record's design calculations.
3. Documentation of any corrective actions that were taken to address any defects and/or cosmetic blemishes to the CIPP that was required of the Contractor following the CIPP System Manufacturer's recommendations and/or that of NASSCO (industry vetted requirements that are included in their CIPP Inspector Training Course).

Materials:

A. General:

1. All components of the CIPP System shall be new and free of defects. The CIPP shall be continuous and of sufficient length to extend from manhole to manhole (or access point to access point).

The CIPP System shall contain no intermediate or encapsulated elastomeric layer(s). No material(s) shall be included in the tube's construction that may cause delamination (or in-plane shear) in the cured CIPP product. No dry or unsaturated layers shall be visually or otherwise evident.

The CIPP System shall be capable of conforming to the irregularities normally found in buried pipes requiring renewal such as offset joints, fractured pipe, and otherwise disfigured pipe sections. It shall be able to stretch to fit these

localized and/or global irregular pipe sections; and, when noted in the plans for the subject pipe reaches, negotiate bends.

B. Fabric Tube:

1. The tube's construction shall consist of two or more layers of nonwoven or woven glass fibers capable of transporting the proposed resin system while withstanding the rigors of the installation and hardening processes in accordance with the ASTM standards D5813 or F2019 as applicable. The tube shall be compatible with the resin system to be used on this project. The material shall be able to stretch to fit any irregular pipe sections and negotiate bends as stated above.
2. The tube should be fabricated to a size that, when installed following the CIPP System Manufacturer's written instructions, will tightly fit the internal circumference and the length of the host pipe structure while simultaneously minimizing the creation of any wrinkles or fins on the interior wall surface. Allowances should be made for the normally anticipated longitudinal and circumferential stretching that occurs during placement of the proposed tube into the host pipe structure.
3. The tube shall be constructed to be uniform in thickness around its finished circumference; and when subjected to the Manufacturer's stated installation pressures will meet or exceed the minimum finished wall thickness calculated for the subject reach of pipe.
4. Any plastic film attached to the tube on what will become the interior wall of the finished CIPP shall be compatible with the resin system used, translucent enough that the resin is clearly visible, and shall be firmly bonded to the felt or other material when it is to become a permanent part of the finished CIPP. It shall also be formulated to create an impermeable barrier or membrane against the leaching of any volatile components of the resin system such as styrene prior to resin hardening taking place.
5. The external plastic film shall also provide a barrier to ambient light UV exposure and be robust enough to survive the rigors of the sliding of the tube into its final position in the pipe to be renewed. The tube shall have an allowance for the required circumferential and longitudinal stretching during installation.
6. The wall color of the interior pipe surface of CIPP after installation shall be a light reflective color.

C. Resin System:

1. The resin system shall be a corrosion resistant polyester, vinyl ester, or epoxy and catalyst system that when properly cured meets the minimum requirements given herein or those that are to be utilized in the design of the CIPP System for this project.

Thixotropic agents that do not interfere with visual inspection may be added for viscosity control. Resins may contain pigments, dyes, or colors that do not interfere with visual inspection of the resin-impregnated CIPP or its required properties.

Hydrophilic End Seals: The ends of the installed CIPP entering and exiting the manholes or other access structures on this project shall be sealed with a preformed neoprene rubber material that possesses significant expansive properties that are activated by the presence of any water at the Host pipe-CIPP interface to provide for a watertight seal. Hydrophilic caulks, hydraulic cements and quick-set cement products are not acceptable for this application. Acceptable materials shall be those products that have a demonstrated performance for the environmental service conditions of the host pipe; and are capable of undergoing alternate wet and dry ground conditions without deleterious effects. End seals shall be the Insignia™ Seal as manufactured by LMK Technologies or an approved equal.

CIPP Design Criteria:

CIPP installations in circular pipe shapes may be designed as a "fully deteriorated" pipe in accordance with the non-mandatory design Appendix X1 in the ASTM CIPP installation standard F1216. The Engineer of Record's design submittal shall clearly identify the physical properties of the proposed CIPP System upon which his/her design is based. When the circular pipe is a fractured, rigid pipe exhibiting an ovality equal to or greater than 10% an alternative design approach must be used.

Prior to performing the required wall thickness design calculations and the ordering of the CIPP tube, the internal dimensions, including currently existing variations in the various radii of the existing drain mainlines shall be verified by the Contractor to ensure the CIPP will be designed and constructed using the current site specific dimensions and geometry.

The design parameters for CIPP thickness calculation shall be based on the following:

A minimum service life of 50 years.

All pipes shall be considered fully deteriorated.

c. A minimum overall safety factor of 2.0 shall be employed in the engineer's calculations to account for seasonal variations in the external hydrostatic pressure, small variations in the wall thickness as defined in the referenced ASTM standards, and minor variations in the size of the annular space.

d. The elevation (location) of the phreatic surface in the groundwater (i.e. water table) will be determined using site specific information obtained from geotechnical surveys or maintenance repair information for the subject areas in order to arrive at an appropriate estimate of the external hydrostatic load likely to be acting on the proposed CIPP liner.

e. Any live vehicular loads at the surface are to be accounted for using commonly accepted approaches for the determination of the magnitude of their vertical influence on the horizontal soil plane at the top of the pipe per applicable governing standards for the type of vehicle(s) creating this loading condition. The plans show the live load rating of the paved roadway surfaces (i.e. H10, H15, H20, H25, etc.) The rigid and flexible pavement thicknesses shown on the plans have been taken from as-built drawings and other sources for the

Engineer of Record's use is calculating the net impact of the live load at the top of the pipe.

f. The depth of cover shall be field verified by the Contractor, as determined by the manholes or other access locations on the reach to be lined with the CIPP. The project plans indicate the vertical variations in the cover between the manholes.

g. An ovality of 1.0% may be assumed for circular shaped pipes up to 12 inches in diameter in rigid host pipe materials exhibiting longitudinal fractures that are visually indicating some change in shape has occurred. No ovality beyond what is allowed during manufacturing is required for rigid pipes that are not found to be so distressed (i.e. un-cracked and cracked pipes). For larger diameter circular pipe shapes demonstrating fractures and changes in shape, the site specific ovality shall be determined by the Contractor using quantifiable measuring tools such as laser profiling. Man-entry size pipes should be profiled using 3-dimensional profiling tools or other approved methods that allow for the variations in radii around the circumference of the pipe to be captured for use in the wall thickness design.

h. The minimum short term flexural modulus of elasticity (ASTM D790) for the various types of CIPP (at 73˚F) shall be 1,000,000 psi.

i. The Flexural Modulus of Elasticity of the proposed CIPP System shall have a minimum creep retention factor of 0.60 for an estimated 50-year hydrostatic design loading period. The creep retention factor shall be determined by the CIPP System Manufacturer through long-term, qualification testing lasting a minimum of 10,000 hours at an appropriate stress level. Documentation of the retention factor will be submitted to the Engineer prior to any design calculations being made.

j. The design calculations shall use this value or the Manufacturer's stated minimal flexural strength value for the CIPP System being supplied for this project.

509.03 Execution

General:

A. Contractor shall field verify the length, size, and other geometry information of each pipe scheduled to be lined by inspection and physical measurements of each pipe end.

B. Contractor shall complete all work in strict accordance with all applicable current OSHA standards. It shall be the Contractor’s responsibility to comply with OSHA Standards and Regulations pertaining to all aspects of the work.

C. Contractor shall submit the proposed work schedule a minimum of seven (7) days prior to all planned work. Contractor shall provide 48 hours advance verbal notice prior to pre- and post-installation inspections. Notice shall include notification of work shifts longer than eight hours and work times planned before 7:00AM or after 4:00PM.

Installation:

A. The CIPP shall be installed in accordance with the practices given in ASTM F2019. The quantity of resin used for the tube's impregnation shall be sufficient to fill the volume of air voids in the tube (97% < volume of resin actually used < 102%). A vacuum or pressure impregnation process shall be used in conjunction with a roller system to achieve a uniform distribution of the resin throughout the tube.

B. Curing of the resin system shall be as per the CIPP System Manufacturer's recommendations. For UV-light cured CIPP systems the curing shall proceed at the CIPP System Manufacturer's recommendation for the size and thickness of the proposed tube and the intensity and duration of the exposure to the photo-initiator's required UV-light wavelength.

C. Cleaning of Drain Lines: Contractor shall clean all debris and foreign matter from inside of culvert to be renewed; with the end goal being that the culvert shall have no debris prior to the CIPP's installation. Cleaning shall be divided into three categories as delineated by NASSCO based the level of effort required in a reach of pipe.

1. Light Drain Cleaning – is defined as the removal of Deposits Settled (DS) up to a depth of 25% of the rise (vertical diametrical) for pipes up to 12-inches in diameter, up to 15% for 13 to 24-inches in diameter, and 10% for 25 to 30-inches in diameter. This is for an unlimited number of passes with the hydraulic flusher.

2. Heavy Drain Cleaning – is defined as the removal of obstructions (OB) and DS that exceed the percentage established for light cleaning. This also includes Deposits Attached Grease (DAGS) if they can be removed with a rotating nozzle or other mechanical means.

3. Deposits Cut – is defined as the removal of Deposits Attached Encrustation (DAE) and DAGS that requires a cutter be employed for their removal. Work done under this item requires substantial effort towards cleaning, cutting, chipping, cutting, grinding, etc. to remove these hardened deposits.

D. Project Site: Upon acceptance of the installation work and testing, the Contractor shall restore the project area affected by the operations to a condition at least equal to that existing prior to the work taking place.

E. Obstructions, major:

1. The Contractor shall clear the drain of obstructions, solids, dropped joints, protruding service lines, collapsed pipe, or any other obstruction that might prevent proper insertion of the CIPP. If inspection reveals an obstruction that would prevent successful installation of the CIPP, the Contractor shall make a point repair excavation to uncover and remove or repair the obstruction. Such excavation shall be approved in writing by the Resident Engineer prior to the commencement of the work. The Contractor shall submit an excavation repair plan in accordance to all federal, state, and local regulations, in writing to the Resident Engineer for all excavation work seven (7) days prior.

F. Delivery, Storage and Handling:

1. Contractor shall protect, store, and handle materials during transportation and delivery, while stored on-site, and during installation following Manufacturer's recommendations.
2. The CIPP shall be maintained at a proper temperature in facilities to prevent premature curing at all times prior to installation. Any CIPP showing evidence of premature curing shall be rejected for use and will be removed from the site immediately.

If any part of the CIPP material becomes damaged before or during insertion, it shall be repaired or replaced at the Contractor's expense before the work may proceed.

J. Hydrophilic End Seals:

1. The Contractor shall insert continuous hydrophilic end seals to the interior circumference of the existing drain pipes at the inlet and outlet of each manhole along the length of the CIPP liner being installed.

K. Finished Mainline CIPP:

The finished CIPP shall be continuous over the entire reach and shall be free of any of the defects described in this Section.

The layers of the finished CIPP shall be uniformly bonded. It shall not be possible to separate any two layers with a probe or point of a knife blade so that the layers separate cleanly or such that the knife blade moves freely between the layers.

All layers, after cure, shall form one homogeneous structural pipe wall with no obvious indication that a part of tube was left unsaturated by resin.

The CIPP shall fit tightly to the internal circumference of the existing pipe..

Wrinkles or fins are undesirable cosmetic defects that may affect the operation of the subject reach of pipe. Where they occur, the engineer will utilize the industry acceptance criteria provided by NASSCO regarding the size and orientation of these defects in order to discern if they can be deemed as commercially acceptable. If they are not deemed acceptable they must be brought into compliance with this standard.

Hardened "lifts" in the finished CIPP are unacceptable and must be repaired in accordance with the CIPP Manufacturer's recommendation for the type of CIPP System that was used.

All other defects found, cosmetic or otherwise, shall be dealt with following the industry accepted standard practice as given in the NASSCO CIPP Inspector Training Program.

Styrene and Temperature Control for the local environment:

1. The Contractor shall take precautions to minimize the release of styrene and mitigate styrene odors generated during the setup and CIPP lining process, and prevent such odors from entering structures, businesses, or other types of establishments, through service connections or other plumbing fixtures.

Styrene air emissions shall comply with Federal and District requirements.

If the pipe being relined is a stormwater pipe or culvert all conditions of the owners MS4 general permit must be met.

Finishing at Ends:

1. Final trimming of the CIPP at any manhole/access point shall be done in such a manner as to provide a long-term mechanical connection between the CIPP and the host pipe.

QUALITY ASSURANCE TESTING:

A. The Contractor shall prepare three quality assurance samples for every 3,000 LF of CIPP installed. The samples shall be restrained samples for diameters of CIPP less than 18"; and flat plate samples for diameters of CIPP 18" and larger. UV cured CIPP flat plate samples must be hardened in a fixture on-site using the same light train under a similar exposure of light intensity and time to that which occurred underground. The samples collected by the Contractor shall be labeled with the date of installation, manhole number, and street address where the sample was taken. All restrained samples, where practical, shall be taken from an intermediate manhole location.

B. The Contractor shall maintain responsibility for the chain of custody for the samples.

C. Testing of the quality assurance samples shall be performed by an independent, certified ISO 17025 testing facility. Each test shall be performed by a laboratory with an American Association for Laboratory Accreditation (A2LA) for the specific test to be performed. Testing shall be in accordance with applicable ASTM test methods as given below:

Wall Thickness. The reported finished thickness of the CIPP's wall shall be found in accordance with the appropriate procedure given in the ASTM standard D3567. For restrained circular samples the technician will make a series of at least 8 readings at randomly selected locations that are approximately equally spaced around the circumference.

For reinforced (full composite) CIPP wall thickness measurements the lab shall employ an optical scale comparator with a 7 to 10X magnification; having a reticle with graduations as stated in paragraph 7.2 of D3567. After making the surface preparation of the cut edge, the reinforced wall thickness and neat resin inner and outer surface layers thicknesses shall be measured.

When the quality assurance samples are of the flat plate type the Contractor shall be required to obtain the wall thickness measurements of the installed CIPP using the ultrasonic pulse echo method described in paragraph 8.6.1 of the ASTM F1216 standard for both types of CIPP.

The reported reinforced CIPP wall thickness shall be the calculated average reinforced wall (or composite) thickness.

Flexural Properties. The initial tangent modulus of elasticity and flexural strength shall be measured for gravity pipe applications in accordance with the ASTM D790 standard as amended in the appropriate CIPP installation standard and as further amended below. This testing shall be accomplished using test method 1 – procedure A on at least 3 specimens; but 5 specimens are preferred.

Reinforced (full composite) CIPP test specimens shall be cut in the hoop direction at a minimum width of 2.0 inches (axial direction of the in situ liner). Modifications to the D790 flexural testing shall follow the guidance found in Annex B of the ISO standard 11296-4. The

nominal span to depth ratio used in their testing shall be 16 to 1 just as for the non-reinforced CIPP specimen. These modifications address how to derive the true unsupported span length and the radius of curvature of the test piece at its mid-thickness. The datum or zero point for strain measurement shall be established from the point of intersection of the slope of the initial linear portion of the stress-strain curve with the strain axis. Where the testing machine software does not automatically correct for zero errors, the testing lab must follow the procedure described in B.5.3 (of Annex B) for deriving the flexural modulus from uncorrected strain data to find the true strain datum. Reinforced CIPP flexural testing should be terminated when the maximum strain in the outer-most fiber surface has reached 3.5% or at break if the break occurs prior to reaching this maximum strain.

The flexural properties test report shall include a statement as to the orientation of each test piece (i.e. hoop or longitudinal); the mean composite thickness and the maximum percentage deviation from the mean within the middle third of the test piece; and in the case of curved hoop test pieces: the mean total thickness; the true span length; and the determination of the mean radius. The flexural properties test report shall also include a copy of the stress-strain curve to a scale sufficient to evaluate the nature of the specimens' performance in bending.

D. The finished CIPP should be watertight throughout its full length. When this is not found to be the case, the allowable water infiltration (or exfiltration) between its termination points shall not exceed 50 gallons per inch of internal pipe diameter per mile per day. Any obvious visual leaks through the CIPP wall shall be repaired by the Contractor using a methodology recommended by the CIPP System manufacturer.

ACCEPTANCE:

A. Acceptance of the CIPP installed on this project shall be based on compliance with this Section as demonstrated with submitted quality control reports, curing logs, post-installation inspection, and laboratory QA test results.

B. Acceptance of the CIPP shall also be based on a post-installation visual inspection by actual man-entry methods. Inspection results showing defects that exceed the stated accepted tolerance levels as defined in the following table shall be remedied by the Contractor. Should any of the defects be found to occur before the end of the Warranty Period, the Contractor shall be required to repair those defects. The repair method chosen by the Contractor may be the Acceptable Remedy listed in the Table 1 below. The Contractor may also submit an alternative remedy for approval by the Authority and, if the Authority approves the alternative remedy, the Contractor shall install the approved remedy. Defects shall be remedied at no additional cost to the Authority.

Table 1 - Defects

Defect	Accepted Tolerance levels	Acceptable Remedy
Visible leaking through CIPP wall	None	• Install internal CIPP spot repair, or • Remove and reinstall CIPP throughout entire reach.
Thickness	All measured thickness values must be ≥ 87.5% of the submitted design wall thickness value	• Install internal CIPP spot repair flush to adjacent CIPP.
Blistering / Dimples / Lifts / Foreign Inclusions/Dry Spots	Per NASSCO CIPP Inspector Training Program	• Install internal CIPP spot repair flush to adjacent CIPP.
Wrinkles and Fins	Per NASSCO CIPP Inspector Training Program	• May be left alone if less than 3% of the pipe I.D. or 0.5 inches; whichever amount is less • Mill down to the industry acceptable height
Cracks	None	• For longitudinal crack, install internal CIPP spot repair flush to adjacent CIPP.
Delamination	None	• Install 2nd full thickness CIPP.
Flexural Properties and/or the wall Thickness are less than those used in the design calculations	Installed Factor of Safety must be greater than or equal to 2.0	• Use the quality assurance sample's test values to recalculate the actual factor of safety for the CIPP as installed. If the actual factor of safety falls below 1.25; install a 2nd full thickness CIPP.

509.04 Method of Measurement:

A. CIPP Rehabilitation:

1. Measurement for installation of Cured-in-Place Pipe shall be made from the inlet to the outlet ends of the culvert and shall be for the entire length of the pipe.
2. Measurement shall be per linear foot per of pipe, and shall include all cleaning, repair and all preparation needed to install the of Cured-in-Place Pipe sliplining.

509.05 Basis of Payment

A. CIPP Rehabilitation:

1. Payment for installation of Cured-in-Place Pipe shall be paid on a linear foot basis in accordance with the Unit Prices contained in the Schedule of Bid Prices.
2. Payment shall include the installation of a pre-liner, the CIPP lining, infiltration control, spill prevention plan, fuel, potable water, hydrophilic end seals, styrene odor mitigation, labor, equipment, material, installation, safety, dust/erosion control, Field Quality Control and quality assurance sample testing, site restoration, and all other associated work specified and/or required to provide a completed installation.
3. Any item not specified elsewhere shall be considered incidental to this work item. Contractor shall include all incidental costs in the Unit Price.

SPECIAL PROVISION

SECTION 511

COFFERDAMS

511.1 Description

This section is amended by the addition of the following:

This work shall consist of the complete design, construction, maintenance and removal of cofferdams and other related work, including dewatering and inspection, required to allow for the installation of a culvert extension and culvert sliplining, and the relocation of the stream on the southerly side of the MTA Exit 75 NB off ramp.

511.5 Method of Measurement

Cofferdams will be measured as one lump sum unit, as indicated on the Plans or called for in the Contract.

511.6 Basis of Payment

The accepted quantity of cofferdam will be paid for at the Contract lump sum price for the respective cofferdam items, which price shall be full compensation for design, construction, maintenance, inspection and removal.

All costs for sedimentation control practices, including, but not limited to, constructing, maintaining, and removing sedimentation control structures, and pumping or transporting water and other materials for sedimentation control will not be paid for directly, but will be considered incidental to the cofferdam Pay Item(s).

All costs for related temporary soil erosion and water pollution controls, including inspection and maintenance, will be considered incidental to the cofferdam Pay Item(s).

All costs associated with preparation of Working Drawings, design calculations, written procedure for sediment shall be considered incidental to the cofferdam Pay Item(s).

All costs for cofferdams and related temporary soil erosion and water pollution controls, including inspection and maintenance, will be considered incidental to related Pay Items, when a specific Pay Item for cofferdams is not included in the Contract.

Payment will be made under:

Pay Item		Pay Unit
511.071	Cofferdam: Sliplining	Lump Sum
511.072	Cofferdam: Slope Repair	Lump Sum

SPECIAL PROVISION

SECTION 515

PROTECTIVE COATING FOR CONCRETE SURFACES

(Clear Concrete Protective Coating)

Section 515, Protective Coating for Concrete Surfaces, is deleted in its entirety and replaced with the following:

515.01 Description

The work shall include the surface preparation and application of a clear protective coating on concrete surfaces to protect new cast-in-place concrete, precast concrete and masonry structures. The coating system shall be applied to piers, endposts, curbs and fascia in accordance with the Plans, Specifications and the manufacturer's published recommendations.

515.02 Materials

The penetrating sealer shall be StandOff® SLX100 Water & Oil Repellent, as manufactured by ProSoCo, Inc., or an approved equal. The sealer shall have the following properties:

Active Substance:	modified alkyl alkoxy silane
Active Content:	> 90%
Form:	clear liquid
VOC:	< 3.5 pounds per gallon

The product shall comply with regulations limiting the Volatile Organic Compound (VOC) content of architectural and industrial maintenance coatings.

The Contractor shall submit the ProSoCo's product data sheets, material safety data sheets and recommended instructions for application of the StandOff® SLX100.

Materials shall be delivered to the site in original packages or containers bearing the manufacturer's labels and identification.

515.021 Substitute Materials

The Contractor shall submit a written request for approval of proposed substitute material naming the proposed manufacturer and product. This request shall be accompanied by:

1. Test data from an independent testing laboratory stating that the proposed substitute meets or exceeds the specified requirements as listed and has been tested in accordance with the specified test standards.

2. Documentation that the proposed material has a proven record of performance when used in the intended application as confirmed by actual field tests and successful installations in place on at least five similar projects.

3. Certification that if two or more types of products are intended to be used as part of a system, they will be supplied by the same manufacturer to ensure compatibility of materials, and to maintain single source manufacturer responsibility.

The Resident reserves the right to require additional testing to evaluate any proposed substitute product at no additional cost to the Authority. The Resident's decision as to the acceptability or non-acceptability of the proposed product shall be final.

515.03 Surface Preparation

All caulking, patching, and joint sealant shall be installed prior to application of the sealer. On new surfaces to be treated, all voids shall be dressed by dry rubbing to remove form marks and blemishes to present a neat appearance. Concrete and masonry surfaces shall be cleaned free of dust, surface dirt, oil, efflorescence and contaminants to ensure penetration of the sealer. The surface may be slightly damp at the time of treatment.

The Contractor may use, when required, appropriate cleaning materials recommended by the sealer manufacturer in conjunction with high pressure water for cleaning the concrete or masonry.

515.04 Application

The Contractor shall apply the clear concrete protective coating in strict accordance with the manufacturer’s published recommendations.

The application shall not be conducted when surface and air temperatures are below 40°F or above 90°F. The work shall not be conducted when there is a chance of the surface temperature falling below 40°F in the 24-hours following application; nor should it be applied on hot, windy days.

The treatment shall not be applied during rain to wet surfaces or when there is a chance of rain within 24-hours after application. After treatment, surfaces should be protected from rain for not less than 48-hours. It shall not be applied when winds are sufficient to carry airborne chemicals to unprotected surfaces.

Prior to applying the sealer, the Contractor shall protect all surrounding non-masonry/non-concrete surfaces, landscape and lawn areas, and surfaces not designated for treatment, from contact with the penetrating sealer, and prevent overspray of the penetrating sealer caused by wind drift.

The Contractor shall ensure that all safety equipment, facilities and precautions recommended by the product manufacturer are furnished and/or strictly adhered to.

The sealer material shall be applied in the manner and with the equipment recommended by the product manufacturer. Coverage will vary depending on condition, texture and porosity of the surfaces. Pre-testing is required.

Sealer shall be applied as packaged without dilution or alteration. The sealer shall be applied with low pressure (20 psi) airless spray equipment or with a heavily saturated brush or roller unless otherwise permitted by the Resident. Sufficient material shall be applied to thoroughly saturate the surface making sure to brush out excess material that does not penetrate.

When the sealer is applied to horizontal surfaces, it shall be applied in a single saturating application with sufficient material and applied so the surface remains wet for one to two minutes before penetration into the concrete. Surface residues, pools and puddles shall be broomed-out thoroughly until they completely penetrate into the surface.

When the sealer is applied to vertical and sloped surfaces, it shall be applied in a "wet-on-wet" application for best results on most porous materials. In the case of extremely dense concrete, it may be necessary to restrict the amount of material applied to one saturating application in order to prevent surface darkening. Apply from the bottom up with sufficient material to thoroughly coat the surface and create a slight rundown below the spray pattern. Allow the first application to penetrate the concrete surface, and within a few minutes after the first coat appears dry, reapply in the same saturating manner.

When the sealer is applied to vertical and sloped surfaces, it shall be applied in two applications, 10 minutes apart, with a low pressure (20 psi) airless sprayer.

515.05 Method of Measurement

Clear Protective Coating for Concrete Surfaces will be measured for payment by the square yard, satisfactorily applied and accepted.

515.06 Basis of Payment

Clear Protective Coating for Concrete Surfaces will be paid at the Contract unit price per square yard which price shall be full compensation for all labor, materials, equipment and incidentals required for furnishing and applying the clear concrete protective coating as shown on the Plans, in accordance with these Specifications or as approved by the Resident.

Surface preparation, vegetation removal, and protection of surfaces not designated for treatment will not be measured separately for payment, but shall be incidental to the Clear Concrete Protective Coating item.

Payment will be made under:

Pay Item		Pay Unit
515.202	Clear Protective Coating for Concrete Surfaces	Square Yard

SPECIAL PROVISION

SECTION 526

CONCRETE BARRIER

(Temporary Concrete Barrier Type I - Supplied by Authority)

526.01 Description

The following paragraphs are added:

This work shall consist of loading, transporting, setting, resetting, removing, transporting and stacking Temporary Concrete Barrier Type I – Supplied by Authority. The barrier shall have attachments allowing individual sections to be connected into a continuous barrier.

The work also includes supplying connecting pins and furnishing and mounting retro-reflective delineators, per Subsection 526.02 and 526.03.

Concrete barriers supplied by Authority shall be available at the following location(s):

Maintenance Area	Linear Feet of Barrier
Crosby Maintenance Area Mile 45.8 Southbound	2,100
Auburn Maintenance Area Mile 76.9 Northbound	500

Upon substantial completion of work, the Contractor shall remove and transport the barrier back to its maintenance area of origin. All barrier shall be returned, sorted and stacked according to type in locations directed by the project Resident or maintenance area foreman.

526.02 Materials

The following paragraphs are added:

e. Delineators shall be bi-directional with a minimum effective reflective area of eight square inches as approved by the Resident. The reflectors shall be methyl methacrylate and the housing of acrylonitrile butadiene styrene. Color shall be in accordance with the MUTCD.

526.021 Acceptance

The Resident shall have the authority to accept or reject all Temporary Concrete Barrier Type I – Supplied by Authority used on the Project that does not meet the requirements of this specification

526.03 Construction Requirements

The following paragraphs are added:

The Contractor shall notify the Resident prior to the scheduled pick-up and delivery of concrete barrier. No barrier shall be removed from or stacked at the Turnpike Maintenance Area without approval of the Resident.

The Contractor shall move and place barrier-utilizing methods that will not damage the barrier. Barrier that is damaged by the Contractor by failing to use proper methods shall be replaced by the Contractor at no additional cost to the Maine Turnpike Authority.

Concrete barrier supplied by the Authority consists of several different styles. Not all barriers may be compatible. The Contractor shall utilize caution when setting barrier to use identical barrier types as adjacent barrier. Non-compatible barrier that cannot be attached together shall be overlapped by a minimum of 10 feet with the blunt end on the non-traffic side of the barrier. This work will not be measured separately for payment, but shall be incidental to the concrete barrier.

Concrete barrier placed at roadway low points shall be shimmed on 1” by 2” by 2’ long wood planks to allow drainage to pass under the barrier. In addition, the Resident may direct the Contractor to shim the concrete barrier at other locations to provide for proper roadway drainage. All labor, material, and equipment necessary to shim the barrier will not be measured separately for payment, but shall be incidental to the Concrete Barrier.

The removal of concrete barrier from adjacent to the travel lane may be conducted without a lane closure if it is accomplished in accordance with the following requirements:

1. Barrier is removed from the trailing end and the workmen and equipment involved in the operation are always behind the barrier. No workmen or equipment shall enter the travel lane.
2. Barrier shall be dragged away from the travel lane to at least a 30-degree angle by the use of a cable.
3. Barrier shall be lifted no more than six inches while within 10 feet of the travel lane.

Retro-Reflective Delineators shall be mounted as follows:

4. One on top of each barrier.
5. One on the traffic side of every barrier used in a taper.
6. One on the traffic side of every other barrier at regularly spaced intervals and locations.
7. Delineators shall be installed on both sides of the barrier if barrier is used to separate opposing traffic.
8. Delineators shall be physically adhered so as to withstand the force of throw from a snow plow.
9. If more than 25% of delineators in any 50 foot section of barrier fall off for any reason, the Contractor will be responsible for reinstalling all the delineators in that run at that their own cost.
10. Contractor is required to submit the installation method for review and approval to the Resident.

526.04 Method of Measurement

The following paragraphs are added:

Temporary Concrete Barrier Type I – Supplied by Authority shall be measured for payment by the lump sum.

The loading, transporting, setting, resetting, removing, transporting, sorting and stacking of the barrier, the furnishing, installation and maintenance of the barrier delineators, and furnishing and installing connector pins will not be measured separately for payment, but shall be incidental to the cost of the Barrier. Temporary storage of Concrete Barrier between construction phases, if required, will not be measured separately for payment, but shall be incidental to the cost of the Barrier. All equipment required to load, unload, transport and stack Concrete Barrier shall be supplied by the Contractor.

Any Barrier lost or damaged by the Contractor shall be replaced by the Contractor at no additional cost to the Authority.

526.05 Basis of Payment

The fifth paragraph is deleted and not replaced.

The following paragraphs are added:

Temporary Concrete Barrier Type I – Supplied by Authority will be paid for at the Contract lump sum price, complete in place. Such payment shall be full compensation for loading, transporting, setting, resetting, temporary storage, removing, transporting and stacking at the area designated, furnishing all materials, and all other incidentals necessary to complete the work. Temporary Concrete Barrier Type I – Supplied by Authority and all connecting pins shall remain the property of the Authority, and shall be returned to the Turnpike Maintenance Area as designated in Subsection 526.01.

Payment of Concrete Barrier shall be based on a percentage of the work accomplished during that pay period.

Payment will be made under:

Pay Item		Pay Unit
526.306	Temporary Concrete Barrier, Type I – Supplied by Authority	Lump Sum

SPECIAL PROVISION

SECTION 527

ENERGY ABSORBING UNIT

(Work Zone Crash Cushion)

527.01 Description

The first paragraph is deleted in its entirety and replaced with the following:

The Contractor shall furnish and install work zone crash cushions where shown on the Plans, as specified herein, in Special Provision 652, or as approved by the Resident. Work zone crash cushions are required at each exposed end of temporary concrete barrier or guardrail.

The exposed end of the concrete barrier within 30 feet of the mainline travel lane shall be protected at all times. Barrier shall not be reset until after the work zone crash cushion(s) has been set to protect the exposed end of the barrier.

527.02 Materials

The following paragraph is added:

Only work zone crash cushions meeting the NCHRP Report 350 TL-3 crash test requirements may be used on the turnpike and local roadways with posted speeds of 45 MPH or greater. Work zone crash cushions meeting the NCHRP Report 350 TL-2 crash test requirements may be used on local roadways with posted speeds of 40 MPH or less. The Contractor shall provide the Resident with documentation of the proposed work zone crash cushion's NCHRP Report 350 Crash Test Results prior to installation at the jobsite.

527.03 Construction Requirements

The following is added to the end of the first paragraph:

The design speeds for work zone crash cushions shall be 45 mph for local road and 70 mph for turnpike roadways unless otherwise noted on the Plans.

527.04 Method of Measurement

Work Zone Crash Cushions used to protect exposed ends of guardrail for steel girder erection will not be measured separately for payment, but shall be included under the Maintenance of Traffic for Steel Girder Erection item.

527.05 Basis of Payment

Payment will be made under:

Pay Item		Pay Unit
527.341	Work Zone Crash Cushions – TL-3	Unit
527.342	Work Zone Crash Cushions – TL-2	Unit

SPECIAL PROVISION

SECTION 603

PIPE CULVERTS AND STORM DRAINS

(Reinforced Concrete Pipe)
(Concrete Collar)

603.01 Description

The following paragraphs are added:

This work shall also consist of furnishing and installing Class III or Class V reinforced concrete pipe at the locations as shown on the Plans or as approved by the Resident.

This work also consists of furnishing and installing a concrete collar to join existing concrete pipe to the proposed concrete or Corrugated High Density Polyethylene (HDPE) pipe in accordance with the details as shown on the Plans. The Contractor shall note that the concrete pipe ends may be of different sizes and may not fit snugly together.

This work shall also consist of furnishing and installing various sizes of corrugated HDPE pipe, including a dual wall adaptor fitting by Hancor or an approved equal as shown on the plans. No other pipe types within the Option III alternatives will be accepted.

603.02 Materials

All Corrugated High Density Polyethylene (HDPE) pipe for storm water and drainage systems shall meet the requirements of Subsection 706.06.

603.11 Method of Measurement

The following paragraph is added:

The Concrete Collar shall be measured by each unit installed, complete in place and accepted. This shall be full compensation for furnishing labor and materials to construct a Concrete Collar to connect the existing and proposed pipe ends in a working like manner.

Dual Wall Adapter Fitting shall be included for payment as three additional linear feet of the largest pipe involved.

603.12 Basis of Payment

Concrete Collars will be paid for at the Contract unit price each regardless of the size of the existing and proposed pipes.

Corrugated HDPE pipe will be paid for under the appropriate sized Culvert Pipe Option III pay items

Payment will be made under:

Pay Item		Pay Unit
603.2453	54 inch Reinforced Concrete Pipe - Class V	Linear Foot
603.28	Concrete Collar	Each

SPECIAL PROVISION

SECTION 606

GUARDRAIL

31" W-Beam Guardrail – Mid-way Splice (7' Steel Posts,
8" Offset Blocks, Single Faced)

606.01 Description

The section is amended by the addition of the following:

This work shall consist of furnishing and installing guardrail components the required locations in accordance with the Specifications and in reasonably close conformity with the lines and grades shown on the Plans. The types of guardrail are designated as follows:

31" W-Beam Guardrail – Mid-way Splice (7' Steel Posts, 8" Offset Blocks)

606.02 Materials

The section is amended by the addition of the following:

Steel posts shall be 7 feet long as specified in the plans.

The guardrail elements shall be per the Components' List found on Sheet No. 2 of 2 of draft Drawing SGR47 – 31" W-Beam Guardrail with Standard 8" Offset Block in the Task Force 13 Report noted above and/or as noted in the Contract Documents unless noted otherwise.

606.04 Rails

The section is amended by the addition of the following:

Height of top of rail shall be 31" measured from final grade. Height transition from 31" W-Beam, mid-spliced guardrail to existing guardrail shall occur over a 25' length.

606.08 Method of Measurement

The section is amended by the addition of the following:

31" W-Beam Guardrail – Mid-way Splice (7' Steel Posts, 8" Offset Blocks) will be paid for at the contract unit price per linear foot of rail satisfactorily installed and accepted.

606.09 Basis of Payment

The section is amended by the addition of the following:

The accepted quantity of 31” W-Beam Guardrail – Mid-way Splice (7’ Steel Posts, 8” Offset Blocks) will be paid for at the contract unit price per linear foot of rail and shall be full compensation for furnishing all labor, equipment and materials necessary to complete the work.

Payment will be made under:

Pay Item		Pay Unit
606.13	31” W-Beam Guardrail – Mid-way Splice (7’ Steel Posts, 8” Offset Blocks, Single Faced)	Linear Foot

SPECIAL PROVISION

SECTION 606

GUARDRAIL

(Terminal End - Anchored End – 31" W-Beam Guardrail)

606.01 Description

The section is amended by the addition of the following:

This work shall consist of furnishing and installing Terminal End – Anchored End – 31" W-Beam Guardrail end treatment in accordance with these Specifications, the AASHTO-AGC-ARBTA Joint Committee Task Force 13 Report: A Guide to Standardized Highway Barrier Hardware, Drawing SEW31 in AASHTO Manual for Assessing Safety Hardware (MASH) approval letter B-256; and in reasonably close conformity with the lines and grades as shown on the Plans or as approved by the Resident.

606.02 Materials

The following sentences are added:

The guardrail elements shall be per the Components' List found on Sheet No. 2 & 3 of 3 of Drawing SEW31 – Trailing-end Anchorage System in the Task Force 13 Report noted above and/or as noted in the Contract Documents. The component RWM14a shall be modified to a length of 9'-4½" measured from the center of the Midway Splice to the center of the last guardrail post.

606.042 Terminal End - Anchored End

The following sentences are added:

Installation of the Terminal End – Anchored End - 31" W-Beam Guardrail end treatment shall be in strict accordance with these plans and specifications, the AASHTO-AGC-ARBTA Joint Committee Task Force 13 Report and the Details on Sheet No. 1 of 3 of Drawing SEW31 – Trailing-End Anchorage System.

606.08 Method of Measurement

The second paragraph is amended by the addition of: ", Terminal End - Anchored End – 31" W-Beam Guardrail," after the words "Terminal section,".

606.09 Basis of Payment

The first paragraph is amended by the addition of: ", Terminal End - Anchored End – 31" W-Beam Guardrail," after the words "Terminal section,".

The second paragraph is amended by the addition of: “, Terminal End - Anchored End – 31” W-Beam Guardrail, and” after the words “NCHRP 350 end treatments”.

Payment will be made under:

Pay Item		Pay Unit
606.1351	Terminal End - Anchored End – 31” W-Beam Guardrail	Each

SPECIAL PROVISION

SECTION 606

GUARDRAIL

(Guardrail – Flared Terminal – 31" W-Beam Guardrail)

606.01 Description

The following sentences are added:

This work shall consist of furnishing and installing a FLEAT (Flared Energy Absorbing Terminal) for use with the 31" W-Beam Guardrail – Mid-way Splice (7' Steel Posts, 8" Offset Blocks, Single Faced) as manufactured by Road Systems, Inc., 1507 East 4th Street, Big Spring, Texas 79720, (915) 263-2435, and retroreflective adhesive sheeting in accordance with these Specifications and the manufacturer's installation instructions, and in reasonably close conformity with the lines and grades as shown on the Plans or as approved by the Resident.

606.02 Materials

The following sentence is added:

Guardrail – Flared Terminal – 31" W-Beam Guardrail components shall be comprised of those shown in the manufacturers installation instructions. 8" blocks shall be used.

Reflective sheeting shall meet the requirements of Subsection 719.01, Reflective Sheeting – minimum ASTM Type XI; 3M™ Diamond Grade™ DG³ Reflective Sheeting Series 4000 or approved equal, color WHITE.

The contractor shall request for the impact face object marker, black chevron on yellow background, to be included in the shipped materials when installation is on the left side of roadway.

The following Subsections are added:

606.03 Posts

Wood offset blocks shall be toe-nailed in two locations to the wood post to prevent the blocks from moving.

606.035 Construction Requirements

The Contractor shall submit a set of installation drawings to the Resident for approval. The system shall be installed in accordance with the manufacturer's recommendation and the installation drawings.

A reflective adhesive sheeting shall be applied to the nose of the FLEAT System after installation. The existing sheeting shall be replaced on FLEAT systems to be removed, modified, and reset. Color – WHITE.

606.041 Reflective Sheeting

The color for the reflective sheeting shall be silver (WHITE) when installed on the outside shoulder and shall be black chevron on yellow background only when installed on the inside shoulder.

606.08 Method of Measurement

The second paragraph is amended by the addition of: "Guardrail – Flared Terminal – 31" W-Beam Guardrail, " after the words "Terminal section, ".

Guardrail – Flared Terminal – 31" W-Beam Guardrail will be measured by each unit satisfactorily complete in place and accepted.

606.09 Basis of Payment

The first paragraph is amended by the addition of: "Guardrail – Flared Terminal – 31" W-Beam Guardrail, " after the words "Terminal section, ".

The second paragraph is amended by the addition of: ", Guardrail – Flared Terminal – 31" W-Beam Guardrail, and " after the words "NCHRP 350 end treatments ".

The retroreflective sheeting will not be measured separately for payment, but shall be incidental to the Guardrail – Flared Terminal – 31" W-Beam Guardrail item.

Payment will be made under:

Pay Item		Pay Unit
606.791	Guardrail – Flared Terminal – 31" W-Beam Guardrail	Each

SPECIAL PROVISION

SECTION 610

STONE FILL, RIPRAP, STONE BLANKET AND STONE DITCH PROTECTION

(Stone Check Dam)
(River Stones)

610.01 Description

Paragraph (f) is deleted and replaced with the following:

(f) Stone Ditch Protection - Machine placed stones on an earth or granular bedding at stone lined ditches, stone downspouts and stone check dams.
(g) River Stones – Machine placed stones on earth bedding along the stream channel at stream mitigation sites

This work shall also include the placement, removal and storage of the stone used for temporary and/or permanent stone check dams.

610.02 Materials

The following is added to paragraph one:

Stone Check Dam	703.29
River Stones	703.26

In addition to the material specification for river stones, the stones shall only be field or river stones with a rounded shape and relatively smooth surface.

610.032 Placing Stones

The following paragraphs are added:

Stone check dams shall be constructed in accordance with the details as shown on the Plans or as approved by the Resident. The stone shall be placed in one operation without special handling or handwork except to create a low point along the top gradient above the ditch flow lines.

River stones shall be placed randomly, in clusters approximately every 40’ as approved by the Resident, within the stream channel and banks. Stones should be placed in a manner to replicate a natural stream channel which will create pools, riffles and runs and to enhance fish passage.

The following Subsection is added:

610.033 Removing Stone

The stone for temporary stone check dams shall be removed after vegetation has been established in the ditches as approved by the Resident.

Any damage to the slopes and ditches caused by the removal of the stone check dams shall be repaired by the Contractor at his own expense.

The area directly under the temporary stone check dams shall be loamed, seeded and mulched immediately after the removal of the stone check dams. The loam, seed and mulch will be measured for payment under the appropriate pay items.

Stone used for temporary stone check dams shall be removed and stored and shall become the property of the Contractor at the completion of the Project.

The following Subsection is added:

610.034 Maintenance

Stone check dams shall be maintained by the Contractor. Sediment deposits behind check dams shall be removed when the depth of sediment reaches 50 percent of the check dam height.

610.05 Method of Measurement

The following paragraphs are added:

Stone for Permanent Stone Check Dams will be measured by the cubic yard complete in place.

Stone for Temporary Stone Check Dams will be measured by the cubic yard complete in place. The removal and storage of the stone will not be measured separately for payment, but shall be incidental to the Temporary Stone Check Dam item. This shall include the transporting and unloading of the stone. If this stone is reused on the Project, it will be measured for payment under the appropriate pay item.

The removal and disposal of sediment from behind the Temporary Stone Check Dams will not be measured separately for payment, but shall be incidental to the Stone Check Dam item.

Stone for River Stones will be measured by the cubic yard complete in place.

610.06 Basis of Payment

The following sentences are added:

The accepted quantities of stone for Temporary and/or Permanent Stone Check Dams will be paid for at the Contract unit price per cubic yard.

Excavation will not be required for the placement of stone for Stone Check Dams.

The accepted quantities of River Stone will be paid for at the Contract unit price per cubic yard.

Payment will be made under:

Pay Item		Pay Unit
610.181	Temporary Stone Check Dam	Cubic Yard
610.21	River Stones	Cubic Yard

SPECIAL PROVISION

SECTION 613

EROSION CONTROL BLANKET

613.01 Description

This work shall also include seeding, mulching and watering the median swale and/or longitudinal flow line to the limits and width as shown on the Plans or as directed by the Resident.

613.02 Materials

The following sentences are added:

Seeding shall meet the requirements of Section 618, Seeding, Method Number 2.

Mulch shall meet the requirements of Section 619.

The following Subsection is added:

613.041 Maintenance and Acceptance

See Section 618.10 for maintenance and acceptance of seeding.

613.042 Mulch

All mulch shall be placed after the area has been seeded and prior to the installation of the Erosion Control Blanket.

613.09 Basis of Payment

The following "and mulch" is added after the words "initial seeding" in the second sentence.

Payment will be made under:

Pay Item		Pay Unit
613.319	Erosion Control Blanket	Square Yard

SPECIAL PROVISION

SECTION 619

MULCH

(Mulch – Plan Quantity)
(Temporary Mulch)

619.01 Description

The first paragraph is modified by the addition of the following:

"as a temporary or permanent erosion control measure" after the word "mulch".

Add the following sentence at the end of the first paragraph:

Refer to Section 656 Temporary Soil and Water Pollution Control, for more information on Temporary Mulch.

619.03 General

The first paragraph is deleted and replaced with the following:

Cellulose fiber mulch shall not be used within 200 feet of a wetland or stream. The limits shall be 200 feet up station and down station of the wetland or streams as well as the slopes adjacent to the stream. The application of hay or straw mulch with an approved binder shall be used at these locations to prevent erosion.

The use of cellulose fiber mulch will only be allowed at other areas with the approval of the Resident. The Contractor may be required to demonstrate that the material may be applied in a manner that will prevent erosion and will aid in the establishment of permanent vegetation. The Resident reserves the right to require the use of hay or straw mulch at all locations if he determines that the cellulose mulch is ineffective. Cellulose fiber mulch is not acceptable for winter stabilization.

619.04 Applying Mulch

The third paragraph is deleted and replaced with the following:

Newly disturbed earth and ditches shall be mulched or otherwise stabilized by the end of each work day and maintained on a daily basis as described in Subsection 105.8.1.11 (b) in the Special Provisions. The Contractor is responsible for applying temporary mulch as necessary, in accordance with the latest edition of the BMP's, to minimize soil erosion prior to the application of the final slope treatment.

Temporary mulch applied during the winter months of November 1st through April 15th shall be applied at twice the standard temporary stabilization rate or 150 lbs. per 1,000 square feet or three tons/acre. Mulch shall not be spread on top of snow and shall be anchored with mulch

netting on slopes steeper than eight percent unless erosion control blankets or erosion control mix is being used on the slopes.

The Contractor shall review his construction operations and staging to determine how much temporary mulching is required.

610.06 Method of Measurement

The following sentence is added:

Temporary Mulch will be paid for by the lump sum.

656.10 Basis of Payment

Temporary Mulch will be paid for at the Contract price per lump sum which shall be full compensation for furnishing and spreading the Temporary Mulch as many times as necessary as determined by the Contractor's operations and staging. The price shall also include the additional mulch netting and snow removal necessary during the winter months.

Payment will be made under:

Pay Item		Pay Unit
619.1201	Mulch – Plan Quantity	Unit
619.1202	Temporary Mulch	Lump Sum

SPECIAL PROVISION

SECTION 621

LANDSCAPING

(Tree and Shrub Plantings)
(Establishment Period)

621.0001 Description

This Subsection is deleted in its entirety and replaced with the following:

This work will consist of furnishing and planting woody plants (trees and shrubs) in the upland and riparian portions of the Stream Mitigation Sites, and shall include all planting operations and materials, including mulch, as well as the care and replacement of plants during the establishment period, all in accordance with this Specification, the planting details and schedules, and the directions of the Resident.

Pursuant to Section 104.5.9, a Two-Year Maintenance Bond will be required in lieu of a Performance Bond by the landscape contractor. Item 621.80, Establishment Period – Two Year, will be paid-out at 50 percent at the end of each year of establishment.

621.0002 Materials - General

The following paragraphs are added:

Woodwaste Mulch shall conform to the requirements of Subsection 621.0026 of this Special Provision.

Fertilizer will conform to Subsection 621.0002, and shall be slow release packet types in conformance with Subsection 717.01.

Layout Flags: Conventional layout flags (wire flags or wood stakes) are not required due to the site size and number of plantings. However, the Contractor shall coordinate the proposed planting layout in advance with the Authority's Wetland Scientist. Final layout of plantings shall be made at least 48-hours prior to planting and approved by the Resident.

Submittals: The Contractor shall provide samples and specification sheets for woodwaste mulch and fertilizers for approval by the Resident.

The following Subsection is added:

621.00031 Plant Materials

Trees and Shrubs: Trees and shrubs shall conform to Subsection 621.0003, and shall be of the types and sizes listed on the Plans and in this Special Provision. Woody plants may be installed

from a mix of potted nursery stock and bare root plantings. At least 70 percent of all plants installed must be potted nursery stock (30 percent may be bare root). Bare root plants may only be installed during dormant plant conditions, and preferably in the early spring.

Ramp Stream Relocation Site

Item	Description	Species Qty	Item Qty
621.7331	Landscaping (Riparian Stream Bank Zone) Shrub, 2’-3’ Group A		444
	Speckled Alder *(Alnus Incana)*	88	
	Red Osier Dogwood *(Cornus Sericea (Alba))*	112	
	Buttonbush *(Cephalanthus Occidentalis)*	92	
	Winterberry *(Ilex Verticillata)*	88	
	Pussy Willow *(Salix Discolor)*	64	
621.7341	Landscaping (Riparian Stream Shelf Zone) Tree, 3’-4’ Group B		204
	Larch *(Larix Laricina)*	40	
	Red Maple *(Acer Rubrum)*	40	
	Black Willow *(Salix Nigra)*	56	
	Green Ash *(Fraxinus Pennsylvanica)*	28	
	Downy Hawthorn *(Crataegus Mollis)*	20	
621.7342	Landscaping (Riparian Stream Shelf Zone) Shrub – 2’-3’ Group C		340
	Speckled Alder *(Alnus Incana)*	24	
	Red Osier Dogwood *(Cornus Sericea (Alba))*	64	
	Buttonbush *(Cephalanthus Occidentalis)*	80	
	Winterberry *(Ilex Verticillata)*	68	
	Pussy Willow *(Salix Discolor)*	40	
	Highbush Blueberry *(Vaccinium Corymbosum)*	24	
621.7351	Landscaping (Riparian Stream Higher Ground Zone) Tree – 3’-4’ Group D		60
	Larch *(Larix Laricina)*	12	
	Red Maple *(Acer Rubrum)*	12	
	Black Willow *(Salix Nigra)*	12	
	Green Ash *(Fraxinus Pennsylvanica)*	8	
	Downy Hawthorn *(Crataegus Mollis)*	16	
621.7352	Landscaping (Riparian Stream Higher Ground Zone) Shrub – 2’-3’ Group E		84
	Speckled Alder *(Alnus Incana)*	8	
	Red Osier Dogwood *(Cornus Sericea (Alba))*	16	
	Buttonbush *(Cephalanthus Occidentalis)*	8	
	Winterberry *(Ilex Verticillata)*	20	
	Pussy Willow *(Salix Discolor)*	16	
	Highbush Blueberry *(Vaccinium Corymbosum)*	16	
621.7361	Landscaping (Upland Zone) Tree – 3’-4’ Group F		164
	Balsam Fir *(Abies Balsamea)*	64	
	Black Cherry *(Prunus Serotina)*	48	

	Eastern White Pine *(Pinus Strobus)*	8	
	Sugar Maple *(Acer Saccharum)*	44	
621.7362	Landscaping (Upland Zone) Shrub – 2'-3' Group G		176
	Beaked Hazelnut *(Corylus Cornuta)*	100	
	Nannyberry *(Viburnum Lentago)*	76	

Possible sources for Riparian Zone and Upland Trees and Shrubs:

Norpine Landscape, Inc.
153 Salem Road
Kingfield, ME 04947
(207) 265-2430

Rosengren Landscaping Inc.
4 Lambert Road,
Freeport, ME 04032
(207) 865-3405

New England Wetland Plants, Inc.
820 West Street
Amherst, MA 01002
(413) 256-1752 or (413) 548-8000

Pierson Nurseries, Inc.
24 Buzzell Road
Biddeford, ME 04005

621.0017 General Construction Requirements

The following paragraph is added:

All wetland trees and shrubs shall be marked with permanent plant identification tags with the species clearly marked, and remain legible for a period of five years. The tags shall be attached to the individual plants. The tags shall be placed at the time of planting.

621.0018 Layout

The following paragraphs are added:

In general, and depending on site conditions, plants will be spaced evenly across the site. Final locations of individual plants will depend on site conditions and hydrology during the time of planting, and upon the direction of Maine Turnpike Authority's Wetland Scientist who will be on-site to provide oversight during planting. Planting concepts are to be followed where appropriate, but adjustments based upon conditions encountered in the field may be necessary. The Wetland Scientist will be on-site to assist the Contractor in determining plant layout and monitoring plant installation. The Contractor shall be assisted by the Resident and Wetland

Scientist in establishing the plant layout concepts according to field conditions. The Contractor shall provide necessary skilled laborers to complete the plant layout markings.

621.0025 Fertilizing

The following sentence is added:

Slow release fertilizer tablets or packets shall be placed within the planting hole, at least one inch below the surface, but not directly touching the root mass.

621.0026 Mulching

The following sentences are added:

In order to reduce competition from herbaceous species and threats from herbivory, all trees and shrubs planted on the site will be mulched with woodwaste mulch.

Woodwaste mulch shall consist of a clean fine-textured composted mix of decomposing bark chips, sawdust, wood shavings, and small wood fragments. Woodwaste Mulch shall meet the following requirements:

(a) pH - Range 5.5 - 7.0.
(b) Screen size – three inch minus.
(c) Containing no less than 80 percent organic content.
(d) Moisture content shall be <60 percent and the product shall be loose and friable, not dusty.
(e) No clods, roots, or materials over three inches in any dimension will be allowed.
(f) No stones over 1/4 inch.
(g) Must be manufactured under DEP license or permit by rule, and/or officially determined by DEP to be "non-regulated" and/or specifically approved by DEP for use in wetlands or waterways.

Woodwaste mulch shall be placed to a uniform depth of at least four (4) inches around individual plants, as part of landscape planting operations, immediately upon planting woody trees and shrubs. The placement of mulch shall cover at least the extent of disturbed soil for each plant, and have a diameter of at least two feet centered on the woody plant.

The following Subsection is added:

621.0032 Watering

Woody plants shall be watered during installation and at least once per week for at least three weeks after planting or until plants go dormant. Watering can be skipped any week that the site receives more than 1/2 inch of natural rainfall during the week, or if ground conditions are saturated. The Contractor may use a sprinkler system and a pump that can be left on-site for up to two years following the original planting. The Contractor may create a borrow hole in an upland

area on-site to create a ready source of water. Any such borrow holes need to be restored to pre-construction conditions prior to Project completion.

621.0033 Protection from Rodents

The following paragraph is added:

All trees and shrubs planted on the site will be encased in rodent guards. The rodent guards must cover the plants to a height of at least eight (8) inches above the ground surface. The guards shall not be removed and will remain on the planted stock after completing the Establishment Period.

621.0036 Establishment Period

The following sentence is added:

The Contractor shall be responsible for 100 percent replacement of dead woody stock for a period of two years from the date of acceptance of the plantings (Pay Item 621.80).

The following Subsection is added:

621.0361 Schedule

All woody plant stock (bare root and potted) must be installed before May 15th during the Spring of 2019. Bare root stock must be dormant and not show any new leaves at the time of planting.

621.0037 Method of Measurement

This Subsection is deleted in its entirety and replaced with the following:

Measurement will be made upon demonstration that the type and quantity of plants as shown on the Plans have been furnished and planted as required and accepted, excluding replacements.

Replacement plants will not be measured separately for payment, but the replacement cost shall be the responsibility of the Contractor.

621.0038 Basis of Payment

Each item will be paid for at the Contract unit price for each accepted tree and shrub planted. Payment shall constitute full compensation for: plant layout, furnishing and placing plants and installing plants; digging, delivering, preparing plant pits, replacing unsatisfactory plants during the planting and establishment periods, rodent protection, control of invasive species; watering, and fertilizing; pruning, and cleanup of planting areas; and for all fertilizer, layout paint or stakes, and all labor, materials, equipment and incidentals necessary to complete the work.

Payment will be made under:

Pay Item		Pay Unit
621.7331	Landscaping (Riparian Stream Bank Zone) Shrub, 2’-3’ Group A	Each
621.7341	Landscaping (Riparian Stream Shelf Zone) Tree, 3’-4’ Group B	Each
621.7342	Landscaping (Riparian Stream Shelf Zone) Shrub, 2’-3’ Group C	Each
621.7351	Landscaping (Riparian Stream Higher Ground Zone) Tree, 3’-4’ Group D	Each
621.7352	Landscaping (Riparian Stream Higher Ground Zone) Shrub, 2’-3’ Group E	Each
621.7361	Landscaping (Upland Zone) Tree 3’-4’ Group F	Each
621.7362	Landscaping (Upland Zone) Shrub 2’-3’ Group G	Each

SPECIAL PROVISION

SECTION 626

FOUNDATIONS, CONDUIT, AND JUNCTION BOXES FOR HIGHWAY SIGNING, LIGHTING AND SIGNALS

(Quazite Junction Box)

626.02 General

The following paragraph is added:

Junction boxes for the electrical and communication conduit associated with the toll equipment and intelligent transportations systems shall be polymer concrete as manufactured by QUAZITE® a division of Hubbell Power Systems. The boxes shall be 36” x 24” and 21” deep. The words ELECTRICAL, LIGHTING, TRAFFIC, or COMMUNICATION shall be stamped on the cover as noted in the Plans or directed by the Resident. The boxes shall have an 8,000 lb. load rating. All existing QUAZITE® Junction Boxes in useable condition shall be removed and relocated as directed by the Resident Engineer.

Junction boxes for the electrical associated with highway lighting shall be precast Quazite. All existing Precast Junction Boxes in useable condition shall be removed and relocated as directed by the Resident Engineer. New boxes shall have the word LIGHTING stamped on the cover.

626.04 Method of Measurement

The following sentence is added:

Quazite junction box shall be measured by each unit in place and accepted existing or new.

626.05 Basis of Payment

The words, “polymer concrete” shall be added after the words, “precast concrete” in the second sentence of the second paragraph.

Payment will be made under:

Pay Item		Pay Unit
626.12	36” x 24” x 36” Quazite Junction Box	Each
626.13	18” x 12” x 18” Quazite Junction Box	Each

SPECIAL PROVISION

SECTION 627

PAVEMENT MARKINGS

(Temporary 6 Inch Pavement Marking Tape)
(Temporary 6 Inch Black Pavement Marking Tape)

627.01 Description

The following sentence is added:

This work shall also consist of furnishing, placing, maintaining and removing temporary pavement marking tape at locations shown on the Plans or as directed by the Resident.

This work shall also consist of furnishing, placing, maintaining and removing temporary black pavement marking tape at locations shown on the Plans or as directed by the Resident. Temporary 6 Inch Black Pavement Marking Tape shall be used to cover conflicting existing pavement marking paint.

627.02 Materials

The following paragraph is added:

Temporary pavement marking tape shall be Stamark Wet Reflective Removable Pavement Marking Tape Series 710 as manufactured by 3M of St. Paul, Minnesota or an approved equal.

Temporary pavement marking tape shall be Stamark Removable Black Line Mask Tape Series 715 as manufactured by 3M of St. Paul, Minnesota or an approved equal.

627.04 General

The following paragraphs are added:

Work under this item shall be in accordance with the manufacturer's recommendations. A factory representative from 3M shall be present for the first application of all temporary pavement marking tape to insure proper application and product performance.

The pavement markings shall be applied mechanically to clean dry pavement as recommended by the manufacturer and approved by the Resident.

Temporary pavement markings shall consist of applying six inch solid white, six inch broken white, and six inch yellow reflectorized pavement marking tape for traffic maintenance during construction as shown on the Plans or as directed by the Resident.

Temporary pavement marking tape that loses reflectivity, becomes broken, dislodged or missing during the life of the Contract shall be replaced by the Contractor at no additional cost to

the Authority.

627.06 Application

The following paragraphs are added:

For application of the tape, when the pavement temperature is below 50°F, heat shall be applied to the pavement surface, if deemed necessary by the factory representative or as directed by the Resident, at no additional cost to the Authority. Proper primer for the temperatures shall be used as directed by the manufacture.

The pavement mark tape shall be rolled over with a vehicle once application is complete and then scored every 20 feet when placed in long runs to prevent full length unraveling.

627.08 Removing Lines and Markings

The following sentence is added:

Removal of temporary pavement marking tape shall be accomplished without the use of heat, solvents, grinding or sandblasting and in such a manner that no damage to the pavement results.

627.09 Method of Measurement

The following paragraph is added:

Temporary Pavement Markings - Tape will be measured for payment by the linear foot. The measurement of broken lines will not include the gaps.

627.10 Basis of Payment

The following paragraphs are added:

Payment for the Temporary Pavement Markings - Tape will be made at the Contract bid price per linear foot, which price shall include furnishing, installing, maintaining and removing the temporary tape and all materials, labor, equipment and incidentals necessary to accomplish the work. Replacement of Temporary Pavement Markings - Tape, as described above, will be incidental and no separate payment will be made.

Payment for the Temporary 6 Inch Black Pavement Marking Tape will be made at the Contract bid price per linear foot installed, which price shall include furnishing, installing, maintaining and removing the temporary tape and all materials, labor, equipment and incidentals necessary to accomplish the work. Replacement of 6 Inch Black Temporary Pavement Marking Tape, as described above, will be incidental and no separate payment will be made.

Payment will be made under:

Pay Item		Pay Unit
627.73	Temporary 6 Inch Pavement Marking Tape	Linear Foot
627.731	Temporary 6 Inch Black Pavement Marking Tape	Linear Foot

SPECIAL PROVISION

SECTION 627

PAVEMENT MARKINGS

(White or Yellow Pavement Marking Line)

627.01 Description

The following sentences are added:

This work shall consist of furnishing and placing the final pavement markings at locations as shown on the Plans or as directed by the Resident.

The following sentence is added:

This work shall consist of furnishing and placing pavement marking paint and temporary pavement marking paint at locations as shown on the Plans or as directed by the Resident.

627.02 Materials

The following is added before the last paragraph:

The paint for pavement markings shall be 100% acrylic waterbase paint.

627.04 General

The following is added to the third paragraph:

Dotted white lines (DWL) shall consist of alternate 3 foot painted line segments and 9 foot gaps.

Permanent pavement marking paint shall be applied at the end of each work week prior to opening the work area to traffic or as approved by the Resident.

Temporary pavement marking paint and temporary pavement markers shall be applied daily prior to opening the work area to traffic during non-work hours or as approved by the Resident.

627.08 Removing Lines and Markings

The last sentence is deleted and is not replaced.

627.09 Method of Measurement

The second and third sentences in the second paragraph are deleted and replaced with the following:

The measurement of broken white lines, both permanent and temporary and dotted white lines, will include the gaps when painted. Temporary painted pavement marking lines will be measured for payment by the linear foot.

627.10 Basis of Payment

This Subsection is deleted and replaced with the following:

The accepted quantity of white or yellow pavement marking lines will be paid at the Contract price per linear foot. This price shall include all labor and materials to furnish, and install the paint line.

The accepted quantity of broken and dotted white pavement marking lines will be paid at the Contract price per linear foot. This price shall include all labor and materials to furnish and install the paint line.

The accepted quantity of temporary white or yellow pavement marking lines will be paid at the Contract price per linear foot. This price shall include all labor and materials to furnish, install and maintain the paint marking.

Payment will be made under:

Pay Item		Pay Unit
627.712	White or Yellow Pavement Marking Line	Linear Foot

SPECIAL PROVISION

SECTION 631

EQUIPMENT RENTAL

631.02 General

The following sentences are added:

Jackhammer - To be included under category of air tool.

Bucket truck - Approved one man, able to reach 30 feet high bucket truck with 10 feet lateral extension.

Scissor Lift - Hydraulic scissors lift with a minimum capacity of three workers.

Electrician - Licensed by State of Maine.

Electrician's Apprentice - Enrolled in an accredited program.

631.08 Basis of Payment

The following paragraphs are added:

Such related costs such as use of hand tools, meal and room expenses, benefits, insurance, retirement, travel time, overtime, overhead and profit will not be measured separately for payment, but shall be incidental to the unit price for the bid item.

Note: For extra materials required for miscellaneous work the General Contractor shall be allowed 15 percent overhead and profit on the cost of materials and rental equipment (not covered by miscellaneous unit items). Rates for Subcontractor owned equipment required to perform miscellaneous work, not otherwise provided for in the Contract, shall be negotiated.

The General Contractor will be allowed 10 percent overhead and profit on the subcontractor's cost of materials, and subcontractors rented equipment (not covered by miscellaneous unit items). The General Contractor shall include his markup on the Subcontractor's labor in the pay items.

The labor hour bid items shall include labor and labor burdens, benefits, supervision, transportation, travel time and allowances, overnights, small tools and equipment, subcontractor overhead and profit, and General Contractor overhead and profit. Time will be measured from the start of work to the stoppage of work at the project site; less the time taken for lunch. No deduction of time will be taken for the standard morning "coffee break".

Payment will be made under:

Pay Item		Pay Unit
631.50	Jackhammer (air tool including operator)	Hour
631.51	Bucket truck	Hour
631.52	Scissor Lift	Hour
631.53	Electrician	Hour
631.54	Electrician's Apprentice	Hour

SPECIAL PROVISION

SECTION 645

HIGHWAY SIGNING

(Remove and Reset Sign on Wooden Post)
(Remove and Reset Sign on Metal Beam)

645.07 Demounting and Reinstalling Existing Signs and Poles

The following paragraphs are added:

At locations noted on the Plans, existing ground-mounted signs are designated to be removed and reset. This work shall consist of removing the sign panels, removing and resetting or disposing of the existing wood posts and resetting the sign panels on new wood posts if required in the appropriate location determined by the Resident. The Resident will determine if a new wood posts is required.

At locations noted on the Plans, existing ground-mounted signs are designated to be removed and reset. This work shall consist of removing the sign panels, removing and resetting the existing metal H-beam post and concrete foundation and resetting the sign panels on a new metal H-beam post and concrete foundation in the appropriate location determined by the Resident.

Any existing signs not shown on the Plans are to remain in their existing condition unless directed otherwise by the Resident.

645.08 Method of Measurement

The following sentences are added:

Removing and Resetting existing ground-mounted signs shall be measured as complete units each, removed, reset and accepted.

645.09 Basis of Payment

The following paragraphs are added:

The accepted signs Removed and Reset on Wooden Post and Metal Beam will be paid for at the Contract unit price each as specified. Such price will include removing and resetting sign panels, removing and resetting or disposing existing wood posts; or removing and resetting or disposing metal H-beam posts and concrete foundations; and resetting the sign panels on the existing or new wood posts, or metal H-beam and new hardware as required to complete the sign installation. Any signs or supports damaged by the Contractor shall be replaced by him with new

signs or supports conforming to the applicable Specifications at no additional cost to the Authority.

Payment will be made under:

Pay Item		Pay Unit
645.1091	Remove and Reset Sign on Wooden Post	Each
645.1092	Remove and Reset Sign on Metal Beam	Each

SPECIAL PROVISION

SECTION 652

MAINTENANCE OF TRAFFIC

(Specific Project Maintenance of Traffic Requirements)

This Specification describes the specific project maintenance of traffic requirements for this Project.

The following minimum traffic requirements shall be maintained. These requirements may be adjusted based on the traffic volume when authorized by the Authority.

Maine Turnpike Traffic Control Requirements

This Section outlines the minimum requirements that shall be maintained for work on, over, or adjacent to the Maine Turnpike roadway. Operations are allowed as outlined below:

During the erection of structural steel – Toll Gantry, traffic shall be stopped and may be held for periods of up to 25 minutes during these operations. Before the roadway is reopened, all materials shall be secured so they will not endanger traffic passing underneath. The Contractor will reimburse the Authority at the rate of $2,500.00 per five-minute period for each roadway not reopened (northbound and southbound), in excess of the 25-minute limit. Total penalty shall be deducted from the next pay estimate. This work will be allowed from 11:00 PM to 5:00 AM Sunday night to Thursday night.

Long Term Shoulder Closure	24 hours per day, seven days per week

Long Term shoulder closures are not allowed from November 15th to April 15th.

SPECIAL PROVISION

SECTION 652

MAINTENANCE OF TRAFFIC

(Truck Mounted Attenuator)

Section 652 of the Maine Turnpike Authority 2016 Supplemental Specifications is modified as follows:

652.1 Description

The following paragraph is added:

When a pay item for a Truck Mounted Attenuator (TMA) is included in the contract at least one TMA will be required on the project and its use will be required. The truck mounted attenuator should be utilized in lane closures and other construction operations where workers are exposed to traffic and not protected by other positive means. The Contractor shall manage the utilization and operation of the TMA and if at least one is not used as described above then it will be considered a Traffic Control Plan violation and result in a reduction of payment as outlined in Section 652.

652.2.1 Truck Mounted Attenuator

This section is deleted in its entirety and replaced with the following:

The truck mounted attenuator system shall conform to the following requirements:

- Truck and attached attenuator shall conform to the NCHRP Report 350, Test Level 3 criteria.
- A mounted revolving amber light or amber strobe light with 360-degree visibility.
- An arrow light bar fixed to the vehicle.
- The attenuator shall be mounted to a vehicle with a minimum weight of 10,000 lbs.

652.3.7 Operations

This section is deleted in its entirety and replaced with the following:

The Contractor shall manage the operation of the truck mounted attenuator. The truck mounted attenuator should be utilized in lane closures and other construction operations where workers are exposed to traffic and not protected by positive means. The operation of the vehicle shall be in accordance with the Manual of Uniform Traffic Control Devices and the manufacturer's recommendation.

Installation: The chart below identifies the distance from the work zone or hazard where the TMA shall be deployed. If the work zone is within a marked lane closure, the barrier truck distances shall apply and if the work is mobile, then shadow truck distances shall

apply. The TMA shall not be located in the buffer zone. When used as a barrier, the barrier truck shall be parked in low gear with brakes applied and the front wheels turned away from the work zone and the adjacent traffic lane. For placement details, reference the Manual of Uniform Traffic Control Devices (MUTCD).

Weight of Truck	Barrier Truck Distance from Work Zone of Hazard	Shadow Truck Distance from Work Vehicle or Work Zone
10,000 lbs	250 ft	300 ft
15,000 lbs	200 ft	250 ft
>24,000 lbs	150 ft	200 ft

652.7 Method of Measurement

The last paragraph is deleted and replaced with:

Truck mounted attenuator shall be measured for payment by the calendar day for each calendar day that a unit is used on a travel lane or shoulder on the project, as approved by the resident.

652.8.2 Basis of Payment

The last two paragraphs are deleted and replaced with:

The Truck Mounted Attenuator(s) will be paid for at the Contract unit price per calendar day for each TMA used. This price shall include all costs associated with the use of the vehicle. Payment shall include operator, fuel, truck, maintenance, flashing lights, arrow board and all other incidentals necessary to operate the vehicle.

Payment will be made under:

Pay Item		Pay Unit
652.45	Truck Mounted Attenuator	Calendar Day

SPECIAL PROVISION

SECTION 655

ELECTRICAL WORK

655.01 Description

All work shall be governed by the Standard Specifications except for that work which applies to those sections of the Standard Specifications which are amended by the following modifications, additions and deletions.

Specifically, for the electrical work (in addition to standards specified in individual work sections), the following standards are imposed, as applicable to the work in each instance:

- NEC, National Electrical Code (NFPA No. 70)
- NFPA No. 101, Life Safety Code
- ANSI C 2, National Electrical Safety Code
- ANSI C 73, Dimensions of Attachment Plugs and Receptacles
- NECA standards for installation
- NEMA standards for materials and products
- UL, Underwriters Laboratories

The Contractor will warranty the material supplied by them and their workmanship for a minimum of 1 year.

655.02 General Provisions

The Contractor shall submit certification of the adequacy of each power and/or communications circuit for the following sub-systems, where applicable:

- Automatic Vehicle Identification (AVI)
- Digital Video Audit System (DVAS)

Verification of the electrical system should be done by turning on/off assigned circuit breakers prior to attachment of equipment to validate panel schedule and that proper voltage is present at termination.

655.03 Wires and Connectors

The requirements of this section apply to the wire work specified elsewhere in these specifications.

The applications for wire and connectors required on the project may include the following:

- Power distribution circuitry.
- Lighting circuitry.
- Appliance and equipment circuitry.

Provide products produced by one of the following or approved equal (for each type of cable, wire and connectors):

Cable and Wire:

- Anaconda Wire and Cable Co.
- Belden Corp.
- General Cable Corp.
- Phelps Dodge Cable and Wire Co.
- Wire and Cable Dept., General Electric Co.
- Rome Cable Corp.

Connectors:

- AMP Inc.
- Burndy Corp.
- Minnesota Mining and Mfg. Co.
- OZ/Gedney Co.
- Thomas & Betts Co.

Wire:

Provide factory-fabricated wire of the size, rating, material and type as required for each service. Where not indicated, provide proper selection as determined by Installer to comply with installation requirements and with NEC standards. Select from only the following types, materials, conductor configurations, insulations, and coverings for 120/240 Volt circuits:

UL Type: THW. (Sizes #6 AWG wire and larger)

UL Type: THHW. (Sizes up to #4 AWG wire)

UL Type: USE. (Underground installation)

Material: Copper.

Conductors: (AWG wire 20 to AWG wire 16).

Note: All low voltage signal conductors (including CAT5e and CAT6 data cables) shall be stranded. Conductors for underground, below grade, or in conduit to lane devices shall be OSP grade, gel filled. Interior building communications cables may be plenum rated for interior wall or cable tray applications.

Concentric-lay-stranded (standard flexibility) (AWG wire 14 and larger).

Interconnection for data communication shall be performed with cables that shall be submitted for approval. The general cable types are designated on the Plans/ Specifications. Minimum bend radius should meet the requirements of the manufacturer and the requirements of the system.

Lead-in cables to extend loop detectors (if needed) shall be IMSA Type 50-2. Loop lead-in cables shall be manufactured with a size of #14 AWG.

Klik-Its (Power & Tel Enterprise Part #C8820) or approved equivalent shall be used at all loopwire splice locations. All splices must be twisted, soldered and shrink-wrap waterproofed before enclosure is placed.

All cable labeling shall be coordinated with the requirements of the Toll System Integrator.

Install electrical wire and connectors as required, in accordance with the manufacturer's written instructions, the applicable requirements of NEC and the National Electrical Contractors Association's "Standard of Installation", and in accordance with recognized industry practices to ensure that products serve the intended functions.

Coordinate cable and wire installation work with electrical wireway and equipment installation work, as necessary for proper interface.

All wire and cable shall be in first class condition when they are installed. Lo-leak lubricants manufactured for the purpose of a pulling lubricant may be used when necessary.

All wires shall be continuous from outlet and there shall be no unnecessary slack in the conductors.

All conduit ends shall have bushings, regardless of size or type.

655.04 Electrical Boxes and Fittings

The types of electrical boxes and fittings required for the project may include the following:

- Junction boxes
- Pull boxes
- Conduit bodies
- Bushings
- Locknuts

Provide products produced by one of the following or approved equal (for each type of box and fitting):

Junction and Pull Boxes:

- Arrow-Hart, Inc.
- General Electric Co.
- Hubbell Power Systems
- OZ/Gedney Co.
- Square D Co.
- Unitil

Conduit Bodies:

- Appleton Electric Co.
- Crouse-Hinds Co.
- Killark Electric Mfg. Co.
- Pyle-National Co.

Bushings, Knockout Closures and Locknuts:

- Allen-Stevens Conduit Fittings Corp.
- Allied Metal Stamping, Inc.
- Appleton Electric Co.
- Carr Co.
- Raco, Inc.
- Steel City, Midland-Ross Corp.
- Thomas and Betts Co., Inc.

Install all equipment cabinets in compliance with NEC requirements, in accordance with the manufacturer's written instructions and with recognized industry practices to ensure that the boxes and fittings serve the intended purposes. The Contractor shall coordinate all associated conduit, wiring and related work with the Resident to confirm appropriate placement in coordination with the equipment installation.

Install electrical boxes and fittings in compliance with NEC requirements, in accordance with the manufacturer's written instructions and with recognized industry practices to ensure that the boxes and fittings serve the intended purposes:

a. Provide knockout closures to cap unused knockout holes where blanks have been removed.

b. Locate boxes and conduit bodies to ensure accessibility of electrical wiring.

c. All boxes shall be rigidly secured in position unless otherwise directed.

d. Where standard boxes are not suitable, provide boxes of special design to suit space and function.

655.05 Grounding

Furnish labor and material to provide grounding facilities for the entire electrical installation as required by all inspecting and jurisdictional authorities as herein specified. The following are included, but not limited to, as items requiring grounding:

- Electrical service neutral conductor.
- Neutral conductor of all transformer secondaries.
- Conduits, boxes and other conductor enclosures. Neutral or identified conductor of interior wiring system.
- Distribution panels and power subpanel boards.
- Non-current - carrying parts of fixed equipment, such as transformers, motors, starters, control cabinets, disconnects, lighting fixtures, stand-by generator, etc.
- Metallic cabinets and auxiliary systems cabinets.

Furnish and install all boxes and/or access plates required for installation and inspection of grounding connections to electrodes.

Provide brass identifying tags on all ground clamps.

Ground connections made to electrodes at such locations as will be readily available for inspection. Provide jumper connections around all meters and shut off devices.

Use electrodes as described in NEC Sections 250-81 or 250-83.

Equipment Grounding: All electrical equipment shall be grounded. Most other equipment will be furnished with grounding pads or grounding lugs. All ground connections shall be cleaned immediately prior to connection. Contractor shall provide all grounding material required but not furnished with the equipment.

No grounding conductor shall be smaller than 10 AWG wire unless it is a part of an acceptable cable assembly.

SPECIAL PROVISION

SECTION 655

ELECTRICAL WORK

(DVAS Camera Mount Installation)

The following Section is added:

655.01 Description

This task shall include installing a Pelco EM2200 J-hook (J-hook provided by Toll System Integrator) to the mast arm upright to accept a Costar CHG3000S enclosure for the DVAS camera (DVAS camera provided by Toll System Integrator). Mounting hardware shall be mounted directly to the mast arm horizontal. Final location shall be approved by the SI. Any additional materials required for the proper installation and function of the DVAS will be incidental to the pay item.

This task shall also include furnishing and installing all conduit, junction boxes, wiring, hardware, and incidentals necessary for supplying the DVAS unit with both power and communications connections. Conduit, junction boxes, and wiring shall adhere to the following specifications:

Conduit: Communication and electrical wiring shall be housed in separate conduit runs. The type of conduit installed shall be determined as follows:

a. 1 Inch Polyvinylchloride (PVC) Schedule 80 Conduit – shall be used between the cabinet and the mast arm upright (underground).

b. ¾ Inch Liquid Tight Metallic (LTM) Flexible Conduit – Shall be used between the junction box mounted to the mast arm upright and the DVAS camera unit.

Communication Wiring: Material shall be direct burial type suited for harsh conditions. Conductor material shall be bare copper, inner jacket material shall be PVC, cable shall be insulated and shielded. Communication cable shall be 4 pair, 24 AWG, Category 5e/6, twisted pair cable, as approved.

Electrical Wiring: Conductor wiring shall be a 3 wire conductor with ground AWG 12 stranded shielded 120 VAC cable for power. Power circuit shall terminate at the AVI subpanel and shall be on its own circuit breaker.

655.05 Measurement of Payment

Measurement and payment for the DVAS camera mount installation, to include Pelco J-hook, wiring for power and communications, conduit and all other material as shown on the Plan drawings and described herein will be per each item.

655.06 Basis of Payment

The accepted quantity of DVAS Mount Installation will be paid for at the Contract unit price per each for the furnishing all necessary material, labor and incidentals required to provide mounting, power and communication to the DVAS camera.

Payment will be made under:

Pay Item		Pay Unit
655.02	DVAS Mount Installation	Each

SPECIAL PROVISION

SECTION 655

ELECTRICAL WORK

(Installation of Sensor Loops)

The following Section is added:

655.01 Description

The contractor shall sawcut concrete pavement slab as directed by the Resident, the SI and according to plans and detailed manufacturer's instructions provided prior to installation. Given the proprietary nature of the loop installation requirements, the manufacturer's instructions will only be provided to the awarded Contractor. Loop installation will involve multiple sawcuts within the limits indicated on the plans and per manufacturer provided templates. Templates for loop cutting outlines shall be provided by the Toll System Integrator. No loop installation activities shall be done without the Toll System Integrator representative on site. The Toll System Integrator will also provide the required materials for sealing the loops including but not limited to the required Loctite epoxy, pump and related injection equipment prior to contractor placing sensor loops. Contractor shall be responsible for obtaining and operation of required sawcutting equipment.

NOTE: All dust must be contained so that no silica reaches MTA employees or patrons. This may be accomplished by using wet saws, advanced air filter systems or by building an enclosure around the work area. The contractor shall provide the resident a 5-day notice prior to any sawcutting activities.

655.05 Measurement of Payment

Payment to be made as lump sum for installation of all associated Sensor loops for the northbound and southbound on ramps (Ramps A, B, C and D) as per the Plan drawings. Sawcutting of concrete slab, installation of epoxy and loops will be incidental to item. The sensor loops and epoxy will be supplied by the Toll System Integrator.

655.06 Basis of Payment

Payment will be made under:

Pay Item		Pay Unit
655.04	Installation of Sensor Loops	Lump Sum

SPECIAL PROVISION

SECTION 655

ELECTRICAL WORK

(Installation of AVI Antennas)

The following Section is added:

655.01 Description

The AVI antenna shall be removed and stored until the mast arms are relocated or the toll gantry installed and then the antennas shall be remounted on existing mast arms or mounted to the new toll gantry. The Contractor shall install antennas and mounts in accordance with the manufacturer's instructions. Antenna wires shall be installed and looped, the AVI equipment vendor will arrive to terminate equipment wiring while the Contractor is onsite. If the vendor requires additional work during termination and testing the Contractor must be present to assist.

655.05 Measurement of Payment

Installation of AVI antenna will be measured per each. The removal and storage of antennae will be incidental to the installation of the AVI antenna. The toll gantry antenna mounting brackets are incidental to the toll gantry structural steel item 504.61.

655.06 Basis of Payment

Measurement and payment for work associated with the installation of AVI antennas as shown on the Plan drawings and described herein will be per each item. The Contractor will not pay for the purchase of antennas or the AVI equipment vendor's presence to terminate and tune equipment.

Payment will be made under:

Pay Item		Pay Unit
655.05	Installation of AVI Antennas	Each

SPECIAL PROVISION

SECTION 655

ELECTRICAL WORK

(Installation of AVI Readers)

The following Section is added:

655.01 Description

Existing AVI readers shall be reused. Contractor shall remove existing AVI readers from existing cabinets and install readers in new or relocated cabinets mounted on new concrete foundations as shown on the Plans.

AVI readers shall be installed in accordance with the manufacturer's instructions with oversight by the Toll System Integrator on-site as needed (to be determined by Resident). New antenna wires shall be installed, terminated, and looped. The Toll System Integrator will be on site to connect equipment wiring and test antenna while the Contractor is on-site. If the AVI equipment vendor requires additional civil or electrical work during termination and testing the Contractor must be present to assist.

655.05 Measurement of Payment

Installation of AVI Readers will be measured per each.

655.06 Basis of Payment

The accepted quantity for AVI Reader Installation will be paid for at the Contract unit price each for work associated with the installation of AVI readers as shown on the Plan drawings and described herein. The Contractor will not pay for the purchase of readers or for the AVI equipment vendor's presence to terminate wiring and tune equipment.

Payment will be made under:

Item		Pay Unit
655.06	Installation of AVI Readers	Each

SPECIAL PROVISION

SECTION 655

ELECTRICAL WORK

(AWG Wire)

The following Section is added:

655.01 Description

This task shall include the providing and installation of the AWG wire, as described herein for clean and dirty power wiring, for grounding wires (where applicable) and other locations called for in the plans/specifications. All wire installed in conduit must be burial grade, suitable for wet locations.

655.05 Measurement of Payment

Measurement and payment for furnishing and installation of the AWG wire as described herein will be per foot, to the nearest 10 foot interval per run.

655.06 Basis of Payment

The accepted quantity of AWG Wire will be paid for at the Contract unit price per linear foot for the furnishing, installation, routing, termination, splices and connection of the wire per the plans and specifications.

Payment will be made under:

Pay Item		Pay Unit
655.102	#2 AWG Wire	Linear Foot
655.110	#10 AWG Wire	Linear Foot

SPECIAL PROVISION

SECTION 655

ELECTRICAL WORK

(4 pr/24 (Category 5e) Cable)

This task shall include the providing and installation of the Category 5e cable shown on the Plan drawings and described herein.

Cable: 4 pair, 24 AWG, Category 5e, twisted pair cable. Conductor material shall be bare copper, inner jacket material shall be PVC, cable shall be insulated and unshielded. Must be direct burial type suited for harsh conditions 4pr/24 category 5e cable, as approved.

Basis of Payment

Measurement and payment for the installation of the 4pr/24 category 5e cable will be by linear foot to the nearest 10 ft. interval. It shall include the furnishing, installation and routing of the cable per the wiring schedule.

Payment will be made under:

Pay Item		Pay Unit
655.14	4pr/24 (Category 5e) Cable	Linear Foot

SPECIAL PROVISION

SECTION 655

ELECTRICAL WORK

(LMR 400 Cable)

The following Section is added:

655.01 Description

This work includes furnishing, installing and terminating LMR 400 cable between the AVI readers and antenna.

655.05 Measurement of Payment

LMR 400 Cable will be measured by the linear foot to the nearest 10 ft. interval.

655.06 Basis of Payment

The accepted quantity of LMR 400 Cable will be paid for at the Contract unit price per linear foot for the furnishing, installation and routing of the cable, as well as all cable end termination.

Payment will be made under:

Item		Pay Unit
655.15	LMR 400 Cable	Linear Foot

SPECIAL PROVISION

SECTION 655

ELECTRICAL WORK

(Fiber Optic Cable)

The following Section is added:

655.01 Description

This task shall include the providing and installation of 62.5/125 micron multimode fiber optic cable as shown on the Plan drawings and described herein. The following specifications for the selection and installation of fiber-optic cable and associated hardware are intended to ensure a reliable and consistent fiber optic media infrastructure for the MTA. All fiber optic cable termination will be incidental to the fiber optic cable.

655.02 Materials

Cable: 6-Fiber multi-mode, 100 mbs, 62.5/125 Microns, Indoor/Outdoor Riser Rater, ST (Male) Connection, as approved.

Specifications: Fiber installed must meet or exceed the following specifications:

- Multimode fiber installed cable shall be 62.5/125micron core/cladding, enhanced grade, multimode, and graded index glass fiber. All materials in the cable shall be dielectric.

- Installed fiber must meet or exceed the following performance specifications:

Wavelength (nm)	Max. Attn.(dB/Km)	Min. Bandwidth (Mhz*Km)
850	3.0	200
1,300	0.9	500

- Plenum rated cable shall be used for all interior installations. Plenum rated cable shall be:
  - Tight buffered 900 um
  - Mechanical strippable Teflon (for plenum applications)
  - EIA/TIA -598 color coding for fiber optic cable
  - Aramid yarn strength member
  - Capable of supporting a short-term tensile load of 400 lb. without stretching.
  - Capable of bend radii as small as 20 x outside cable diameter (under installation load) and 10 x outside cable diameter (long term load)
  - Capable of a minimum crush resistance of 850 lb./in.

- Corning fiber is currently required for installation. Cable from other manufacturers will not be considered.

All cable is to be fully supported throughout its entire run.

At no time shall more than 400 pounds of tension be placed on any fiber cable while it is being pulled through tray or conduit. It is preferred that all fiber cable be pulled with hand power only. If power winches or mechanical advantage devices are used to pull cable, a tensionometer must be used to insure that maximum tension is not exceeded. Alternatively, a "mechanical fuse" rated at 350 pounds may be included in the linkage. Torsion shall be avoided by the use of a swivel at the cable end. While under tension, a minimum bend radius of 20 times the outside cable diameter will be maintained through the use of pulleys and sheaves where required. After pulling, no bend may have a radius, at rest, of less than 10 times the outside cable diameter.

Each cable is to be permanently labeled at each end with a unique cable number. In addition, labels shall be affixed to the cable at every transition of a vault, hand hole, riser closet, or major pull box.

Each fiber optic strand shall be labeled with a unique identifier at the ST coupler.

Fiber ends are to be terminated in ST-type connectors. No splices will be permitted. The cable shall be continuous run from lane controller to server room fiber switch location.

At each end of the cable, sufficient slack (15 - 30') shall be left to facilitate reasonable future relocation of the fiber switch or lane controller. Slack shall be mounted on walls or upper ladder racks.

Testing: Contractor shall test all long reels with an OTDR for length and transmission anomalies while on the reel prior to installation. It is suggested that each individual fiber in a cable regardless of length be tested with an OTDR for length and transmission anomalies while on the reel before installation.

All multimode fiber strands shall be tested end-to-end for bi-directional attenuation, 850 nm/1300 nm for multimode. Tests should be conducted in compliance with EIA/TIA-526-14 or OFSTP 14, Method B, according to the manufacturer's instructions for the test set being utilized.

Tests must ensure that the measured link loss for each strand does not exceed the "worst case" allowable loss defined as the sum of the connector loss (based on the number of mated connector pairs at the EIA/TIA-568 B maximum allowable loss of 0.75 dB per mated pair) and the optical loss (based on the performance standard above, 2.1.1 and 2.2.1).

After termination, each fiber shall be tested with an ODTR for length, transmission anomalies, and end-to-end attenuation. Results are to be recorded and supplied to MTA in the form of hard-copy printouts or photographs of screen traces.

After termination each terminated fiber is to be tested for end-to-end loss with a power meter/light source. As above, results are to be recorded and supplied to MTA.

5.2.4. The Contractor shall review all end faces of field terminated connectors with a fiber inspection scope following the final polish. Connector end faces with hackles, scratches, cracks, chips and or surface pitting shall be rejected and re-polished or replaced if re-polishing will not remove the end face surface defects. The recommended minimum viewing magnifications for connector ends are 100X for multimode fiber and 200X for single mode fiber.

655.05 Measurement of Payment

Measurement for the installation of the Fiber Optic cable will be by linear foot to the nearest 10 ft. interval. It shall include the furnishing, installation, routing and termination of the cable per the plan drawings.

655.06 Basis of Payment

The accepted quantity of 6 Strand Multi-modal Fiber Optic Cable will be paid for at the Contract unit price per linear foot for furnishing, installation, routing, and termination of the cable.

Payment will be made under:

Pay Item		Pay Unit
655.16	Fiber Optic Cable	Linear Foot

SPECIAL PROVISION

SECTION 655

ELECTRICAL WORK

(Fiber Optic Splice Panel)

The following Section is added:

655.01 Description

This task shall include providing and installing fiber optic splice panels as described herein. Fiber optic splice panels shall be Panduit® FWME2 or an approved equal.

655.05 Measurement of Payment

Measurement for installing the fiber optic splice panel cabinet as shown on the Plans and as described herein will be per each item. It shall include the furnishing, installation, and mounting of the cabinet.

655.06 Basis of Payment

The accepted quantity of Fiber Optic Splice Panels will be paid for at the Contract unit price per each for furnishing, installation and routing of the cable.

Payment will be made under:

Pay Item		Pay Unit
655.165	Fiber Optic Splice Panel	Each

SPECIAL PROVISION

SECTION 655

ELECTRICAL WORK

(3 Inch Schedule 80 PVC Conduit)
(4 Inch Schedule 80 PVC Conduit)

The following Section is added:

655.01 Description

The Contractor shall reuse existing conduit to the maximum extent practical. Where existing conduit is not suitable for reuse or additional conduit runs are required, the Contractor shall provide new PVC Conduit as shown on the Plans, as directed by the Resident, and as described herein.

This task shall include providing and the installation of PVC Conduit as shown on the Plan drawings and described herein. All conduit shall be installed per NEC specification. Connections to specialized fittings are to be compatible with adjoining conduit.

Joints shall be made in accordance with ASTM D 2855. Solvent cement shall meet the requirements of ASTM D 2564 with particular attention to matching the viscosity to the conduit size.

Joint adhesives shall be in accordance with ASTM D2517.

All conduit runs shall be watertight. Slope conduit to drain into junction boxes.

All empty conduits shall have a labeled pull string. Pull strings shall have length markings and should be used for long conduits over 50’ or for all underground installations. Clean, plug and seal conduit ends after installation.

655.05 Measurement of Payment

Measurement and payment for installing the PVC Conduit as shown on the Plan drawings and described herein will be per foot. It shall include the furnishing, installing, supporting and connection of the conduit and all misc. hardware necessary for the installation. This price shall include the cost of hand digging, trenching, or plowing; furnishing and installing the conduit; and all labor, equipment and incidentals necessary to complete the work.

655.06 Basis of Payment

Pay Items are as follows:

Pay Item		Pay Unit
655.204	3” Schedule 80 PVC Conduit	Linear Foot
655.205	4” Schedule 80 PVC Conduit	Linear Foot

SPECIAL PROVISION

SECTION 655

ELECTRICAL WORK

(Install Communications Cabinet (Provided by MTA))

The following Section is added:

655.01 Description

This task shall consist of installing two new communications cabinets provided by the Authority on new 2.5'x4'x8" concrete foundation as shown on the plans or described herein. Prior to the cabinets being relocated, the Authority will remove the equipment from within the cabinet.

Cabinet #	Existing Location	Reset Location
1	Ramp C	Ramp C
2	Ramp A	Ramp D

655.02 Materials

Both new communications cabinets are 334 Traffic Cabinets.

655.05 Measurement of Payment

New communications cabinets will be measured by each unit.

655.06 Basis of Payment

The accepted quantity of Install Communications Cabinet will be paid for at the contract price each for casting a new reinforced concrete foundation, removing from existing location, transporting, relocating and reinstalling the new and existing cabinet on to the new foundation and all incidentals required to complete the work as shown on the plans or described herein.

Payment will be made under:

Pay Item		Pay Unit
655.30	Install Communications Cabinet (Provided by MTA)	Each

SPECIAL PROVISION

SECTION 655

ELECTRICAL WORK

(Install Communications Cabinet (Provided by Contractor))

The following Section is added:

655.01 Description

This task shall consist of installing one new communications cabinet provided by the Contractor on a new 3.0'x4.5'x8" concrete foundation as shown on the plans or described herein. Prior to the cabinets being relocated, the Authority will remove the equipment from within the cabinet.

Cabinet #	Installation Location
1	Ramp A

655.02 Materials

The new communications cabinet shall be a 332D Traffic Cabinet.

655.05 Measurement of Payment

New communications cabinet will be measured by each unit.

655.06 Basis of Payment

The accepted quantity of Install Communications Cabinet will be paid for at the contract price each for casting a new reinforced concrete foundation, installing the new cabinet on to the new foundation and all incidentals required to complete the work as shown on the plans or described herein.

Payment will be made under:

Pay Item		Pay Unit
655.31	Install Communications Cabinet (Provided by Co ntractor)	Each

SPECIAL PROVISION

SECTION 655

ELECTRICAL WORK

(P44 NEMA 3R Cabinet)

The following Section is added:

655.01 Description

The contractor shall furnish and install three new concrete pad mounted P44 NEMA 3R cabinet as designated on the Plans.

The P-44 type cabinet will have side and back panels, a main door and an aluminum extension base. All exterior seams shall be continuously welded.

The cabinet door shall be a minimum of 80% of the front surface area and shall be hinged on the right side with a continuous hinge. The cabinet doorframe shall be flanged on all four sides with a light/alarm switch bracket located in the upper right-hand corner. The latching mechanism shall be a 3-point draw roller type made of steel with a center catch. The operating handle shall have provisions for padlocking in the closed position. The main lock shall be a Corbin 1548-1 and furnished with two keys as specified by the Authority. The door shall have a gasket that forms a weather tight seal between the door and the cabinet. The lower portion of the door shall be vented with louvers on the exterior to provide 100 cfm of air flow. A filter held firmly in place by side and bottom brackets shall cover the louver vents on the door's interior. A door restraint shall be furnished to prevent door movement during windy conditions.

The exterior of the cabinet shall be natural aluminum. The interior surface of the cabinet and door, including shelves shall be painted with appliance white alkyd baked enamel paint.

A ventilation fan powered by a 115-volt single phase motor and rated at an air flow of 100 cfm shall be installed at the top of the cabinet. The screened exhaust vent shall be vented between the top of the cabinet and the door. The ventilation fan shall be controlled by means of a thermostat with a range of 70°F to 160°F with overload protection and noise suppressor.

LED strip lighting shall be installed.

The cabinet trouble light shall be a stainless steel, flex shaft type, 18 inch in length with on/off switch. Trouble light shall be mounted on the right-inside of the cabinet.

655.05 Measurement of Payment

Measurement and payment for furnishing and installing the subpanel and cabinet as shown on the plans drawings and described herein will be per each item. It shall include the furnishing, installation, mounting of the subpanel and cabinet, and all labor, equipment and incidentals necessary to complete the work.

655.06 Basis of Payment

Payment will be made under:

Pay Item		Pay Unit
655.41	P44 NEMA Cabinet	Each

SPECIAL PROVISION

SECTION 655

ELECTRICAL WORK

(60 AMP Panelboard Cabinet)

The following Section is added:

655.01 Description

The Contractor shall provide and install 60-amp panelboard cabinet as designated on the Plan drawings. Panelboard cabinet shall be of the dead-front, safety type with space for 24 single pole breakers. Cabinet shall be constructed of zinc coated sheet steel and shall conform to Underwriters Laboratories, Inc., Standard for Cabinet and Boxes.

Panelboard cabinet height shall not exceed 72 inch and shall be mounted so that the distance from the floor to center of the top circuit breaker will not exceed 6 feet. Cabinet shall be provided with trims having adjustable trim clamps. Trims, unless otherwise noted, shall be fitted with hinged doors.

655.05 Measurement of Payment

Measurement and payment for installing the panelboard cabinet as shown on the Plan drawings and described herein will be per each item. It shall include the furnishing, installation, mounting of the cabinet, and the drilling of holes into the box for conduits.

655.06 Basis of Payment

Pay Items are as follows:

Pay Item		Pay Unit
655.43	60 AMP Panelboard Cabinet	Each

SPECIAL PROVISION

SECTION 655

ELECTRICAL WORK

(Removal of Existing Select Toll Equipment)

The following Section is added:

655.01 Description

The work shall include the removal of existing select toll equipment, defined as the cabinets, cables/conduit and lane controllers. It shall also include removal of all associated power and data cables from the existing lane controllers. All cables/wires/conduits abandoned from the removal of the existing select toll equipment shall be removed (unless housed in a conduit with other cables, making it impossible to remove without removing and replacing the cables/wires that are staying). Removing abandoned cables/wires/conduits shall be incidental. All existing select toll equipment removed shall be done with care, without harm to the equipment, and shall be stacked at the System Integrator Warehouse in Portland, ME.

This work shall also include removing and stacking (at the Cumberland Maintenance Facility) the two-existing pole mounted toll equipment cabinets located at approximately Ramp C (Stations 6+75 RT) and Ramp D (Station 8+50 RT).

This work shall also include removing and relocating the mast arms located at approximately Ramp C (Stations 6+75 RT) and Ramp D (Station 8+50 RT), to the proposed location detailed within the plan set. The existing mast arm foundations shall be demolished down to two feet below existing grade and payment will be incidental to this item. The relocated mast arms will be reinstalled on new foundations, per item 626.32.

Basis of Payment

Payment will be made under:

Pay Item		Pay Unit
655.71	Removal of Existing Select Toll Equipment	Lump Sum

SPECIAL PROVISION

SECTION 655

ELECTRICAL

(Lightning Suppression System)

655.81 Description

This task shall include furnishing and installing the lightning protection system as described in the Plan drawings and described herein.

Lightning suppression system certification is excluded from this task.

655.82 Submittals

1. Product Data: For air terminals and mounting accessories, grounding conductors, grounding electrodes, and ground connection equipment.

2. Shop Drawings: Detail lightning protection system, including air-terminal locations, conductor routing and connections, and bonding and grounding provisions. Include indications for use of raceway, data on how concealment requirements will be met, and calculations required by NFPA 780 for bonding of grounded and isolated metal bodies.

3. Qualifications: Qualification data for firms and persons specified in "Quality Assurance" Article to demonstrate their capabilities and experience. Include data on listing or certification by an NRTL or LPI.

4. Inspection: Field inspection reports indicating compliance with UL Master Label Certification.

655.83 Quality Assurance

1. Installer Qualifications: Engage an experienced installer who is an NRTL or who is certified by LPI as a Master Installer/Designer. Installer shall be UL listed as a lighting protection installer.

2. Listing and Labeling: All system components utilized in the installation shall comply with the Standard for Lightning Protection Components, UL 96A.

655.84 Coordination

Coordinate installation of lightning protection with installation of other tolling systems and components, including electrical wiring, supporting structures and materials, metal bodies requiring bonding to lightning protection components, and finishes.

655.85 Products

Subject to compliance with requirements, provide products by one of the following manufacturers or approved equal:

1 Automatic Lightning Protection.

2 ERICO International Corporation.

3 Harger Lightning Protection, Inc.

4 Heary Bros. Lightning Protection Co. Inc.

5 Independent Protection Co.

6 Robbins Lightning Inc.

7 Thompson Lightning Protection, Inc.

Air Terminals shall be NFPA Class I, solid copper, 3/8” diameter, by 24” tall or 10” tall, as indicated on the Contract Drawings. Main roof conductors as down conductors shall be bare copper in sizes as indicated on the Contract Drawings. Grounding electrodes shall be copper-clad steel, 3/4” diameter by 10’-0” long.

655.86 Execution

All work shall conform to the requirements contained in the latest edition of UL 96A, Installation Requirements for Lightning Protection Systems, and in the latest edition of NFPA 780 Standard for the Installation of Lightning Protection Systems.

Install conductors with direct paths from air terminals to ground connections. Conductors shall be supported for their entire length without travel through free air. No bend of a conductor shall form an included angle of less than 90 degrees or have a radius of bend less than 8 inches.

Conductors shall not be directly attached to aluminum or galvanized steel. Do not combine materials that can form an electrolytic couple that will accelerate corrosion in the presence of moisture unless moisture is permanently excluded from junction of such materials.

Main conductors shall be fastened at intervals not exceeding 3 feet.

Down conductors shall be installed within Schedule 80 PVC conduit for physical protection.

Use UL listed connectors or approved exothermic-welded connections for all conductor splices and grounding connections.

655.87 Method of Measurement

The Lightning Suppression System will not be measured separately for payment but shall be measured as a single item including furnishing and delivering the lightning suppression system at all toll points as required on the Plans and in this Specification, miscellaneous hardware and fittings, site coordination, all completed, tested, accepted, and ready for use.

655.88 Basis of Payment

Payment will be made at the Lump Sum Contract unit price for the Lightning Suppression System measured as specified above, which price and the payment thereof shall constitute full compensation for all labor, materials, equipment, incidentals and expenses necessary to complete the work.

Payment shall include excavation, air terminals, grounding rods, heavy duty ground test wells with cover, copper wire, and associated hardware for a complete operational system.

Payment will be made under:

Pay Item		Pay Unit
655.80	Lightning Suppression System	Lump Sum

SPECIAL PROVISIONS

SECTION 655

ELECTRICAL

(Utility Building Generator)

655.01 Description

The work of this Section consists of the furnishing, installing, and start-up testing a new 60 kW diesel powered generator at the Auburn Interchange.

The listed accessories such as battery charger, engine heater, exhaust silencer, exhaust piping and insulation, radiator shroud, louver and ductwork, etc. are included in this Section.

The work is to be in accordance with these Specifications.

655.02 Materials

The generator system shall be capable of providing a source of emergency power that complies with Article 700 of the National Electrical Code. All materials shall be new and comply with NEMA, UL and NEC standards, listings and requirements as applicable.

System Capacity

The capacity of the installed generator system shall be rated at elevation to 300 feet above sea level and ambient temperature between -20 ºF and +100 ºF; continuous standby rating using engine-mounted radiator. The capacity includes the ten percent power factor and shall be the minimum capacity supplied for the unit.

Submittals

The following specific requirements are in addition to Section 105.02 of the State of Maine Standard Specifications GENERAL PROVISIONS and the GENERAL and SPECIAL PROVISIONS of this Contract.

Shop Drawings shall include plan and elevation views with overall and interconnection point dimensions, fuel consumption rate curves at various loads, ventilation and combustion air requirements and electrical diagrams including schematic and interconnection diagrams.

Submittals are required for the following equipment items:

1. Standby Generator with Accessories
2. Exhaust Silencer, Exhaust Piping, and Flexible Exhaust,
3. Batteries
4. Battery Charger
5. Vibration Isolators
6. Control Panel and Wiring Diagrams

7. Main Circuit Breaker

Warranty

The complete electrical power system (diesel engine powered generator, controls, and associated switches, switchgear, and accessories), as provided by the single source manufacturer shall be warranted by said manufacturer against defects in materials and workmanship for a period of five years, or 1500 hours, whichever occurs first from the date of system acceptance. Said coverage shall include replacement parts for the entire coverage period, as well as labor to replace warrantable parts through the second year of coverage, per the manufacturer's standard published limited warranty. There shall be no deductibles applied to the warranty. A copy of written warranty shall be attached to Shop Drawing submittal.

Operation and Maintenance Manuals

Provide three sets of manuals prepared by the generator manufacturer containing spare parts list, complete wiring diagrams, maintenance, operating and repair instructions for each piece of equipment furnished under this Contract. The manuals shall also include instructions for normal operation, routine maintenance requirements; service manuals for engine, generator and all serviceable components; oil sampling and analysis for engine wear, and emergency maintenance procedures. All materials are to be submitted and approved by the Engineer prior to final payment.

Manufacturer's Requirements

A. It is the intent of these Specifications that a completely operable generator be furnished and delivered by the Contractor. All items shall be coordinated to provide an integrated system, insuring reliability of operation and convenience for maintenance and repair. The generator shall be composed of all items of new manufacture.

B. The supplier of the generator must have a local and nationwide sales and service organization. Units assembled by the Contractor from several manufacturers' components will not be acceptable.

C. Parts and service must be available locally on a 24-hour a day basis (this shall include engine, generator and control cabinet parts) so that the Authority shall not be penalized due to a breakdown.

D. Supervision of coordination of components must be given by the manufacturer of the unit.

E. Unit start-up service and load testing shall be performed by a factory trained representative.

F. Furnish service and maintenance of packaged engine generator system for one year from date of final acceptance of this Contract.

Extra Materials

A. Furnish one set of specialty tools (any tool required for maintenance, but not typical to a mechanics tool box) required for preventative maintenance of the engine generator system. Package tools in adequate size metal toolbox.

B. Provide two additional sets of each oil and air filter element required for the engine generator system.

Acceptable Manufacturers

A. Cummins Power Generation
B. Caterpillar Engine Division
C. Kohler Co. Generator Division

Engine Characteristics

A. Type: Water-cooled inline or V-type, four stroke cycle, compression ignition, and internal combustion engine. The engine shall be EPA Tier IV compliant.

B. Rating: Sufficient to operate at 10 percent overload for any two-hours of a 24-hour period at specified elevation and ambient limits.

C. Fuel System: Diesel

D. Engine Speed: Rated - 1800 RPM.

E. Governor: Isochronous type to maintain engine speed within 0.25 percent, steady state and 5 percent, no load to full load, with recovery to steady state within 2 seconds following sudden load changes. Equip governor with means for manual operation and adjustment.

F. Safety Devices: Engine shutdown on high water temperature, low oil pressure, overspeed and engine over-crank NFPA Package.

G. Engine Starting: DC starting system with positive engagement, number and voltage of starter motors in accordance with manufacturer's instructions.

H. Engine Jacket/Block Heater: Thermal circulation type water heater with integral thermostatic control, sized to maintain engine jacket water at 90ºF and suitable for operation on 120 volts AC.

I. Radiator: Engine mounted radiator using glycol coolant, with blower type fan, sized to maintain safe engine temperature in ambient temperature of 110ºF, Radiator Air Flow Restriction: 0.5 inches of water maximum. Provide antifreeze to -32ºF for generator engines.

J. Exhaust Silencer:

1. Residential level exhaust silencer with side inlet and end outlet.

2. Flexible exhaust connections (stainless steel).

K. Exhaust Piping and Insulation: See Specifications.

L. Engine Accessories: Lube oil filter, intake air filter, lube oil cooler, gear-driven water pump. Include water temperature gage and lube oil pressure gage on engine-generator control panel.

M. Mounting: Provide unit with suitable vibration isolators to provide 95 percent vibration elimination and mount on structural steel base.

N. Battery: Provide battery(s) as recommended by Manufacturer.

Generator Characteristics

A. Generator: 120/240V, 60 Hz, single Phase, 60 kW Standby with a minimum 10 percent Surge rating.

B. Generator shall be completely brushless synchronous type, single bearing, directly connected to the engine flywheel and housing. Frame to be drip proof intake, open exhaust.

C. The generator shall be supplied with pole face (amortisseur) windings. The direct axis transient reactance shall not be greater that 20 percent based on rated KW, 0.8 P.F. when operating at 1800 RPM. Waveform deviation factor not to exceed 10 percent no load, line to line, or line to neutral.

D. Insulation: ANSI/NEMA MG 1, Class F.

E. Temperature Rise: 105ºC continuous, 130ºC standby

F. Enclosure
1. ANSI/NEMA MG 1; open drip proof. Vandal-resistant, sound-attenuating, weatherproof steel housing, wind resistant up to 100 mph. Multiple panels shall be lockable and provide adequate access to components requiring maintenance. Panels shall be removable by one person without tools. Instruments and controls shall be mounted within enclosure.
2. Engine Colling Airflow through Enclosure: Maintain temperature rise of system components within required limits when unit operates at 110 percent of rated load for 2 hours with ambient temperature at top of range specified I system service conditions.
    - Louvers: Fixed-engine, cooling-air inlet and discharge. Storm-proof and drainable louvers prevent entry of rain and snow.

- Automatic Dampers: At engine cooling-air inlet and discharge. Dampers shall be closed to reduce enclosure heat loss in cold weather when unit is not operating.
- Ventilation: Provide temperature-controlled exhaust fan interlocked to prevent operation when engine is running.

3. Finishes: Manufacturer's standard finish over corrosion resistant pretreatment and compatible primer. The Resident shall select color.

G. Exciters

1. The exciter field shall be of a single field construction with the exciter armature of the inboard rotating type, mounted on the alternator shaft, the output of which shall supply DC excitation for the main rotating field connected to a rotating rectifier bridge assembly. It must be possible to measure the DC voltage output of the rotating rectifier bridge to eliminate damage to this bridge due to excessive inverse voltages that occur when paralleling is attempted without regard to synchronization, short circuits and application of the generator across the line while the rotor is in a stationary position.

2. The rectifiers must be selected such that rated load conditions on the generator will not cause an average current per rectifier to exceed two-thirds the rated forward current of the rectifier, nor the peak inverse voltage of any one rectifier.

<u>Regulator Characteristics</u>

1. The voltage regulator shall be of the static single field type capable of regulating the voltage output to within one percent of the adjusted voltage for any rated load conditions between no load and full load between 0.8 P.F. and 1.0 P.F. The regulator must be capable of adjustment from ten percent below the lowest rated voltage and ten percent above the highest rated voltage at no load.

   a. Built-in EMI suppression.

   b. Built-in under frequency protection.

<u>Generator Control Cabinet Characteristics</u>

1. NEMA Class 1 drip proof and to include:

   a. Main circuit breaker.

   b. Voltmeter, with light and audible alarm for over voltage.

   c. Ammeter.

   d. Frequency meter.

   e. Elapsed time meter.

f. Voltage adjusting Rheostat.

g. Circuit breaker for DC Fields.

h. Automatic engine starting with lights, and audible alarm(s), for low oil pressure, high and low coolant temperature protection, low coolant level, over-speed and over-cranking limiter-cyclic, 1-4 cranks over 90 sec. with all time sequences adjustable.

i. All devices shall be marked with nameplates and all leads shall be fully marked for easy identification and connection.

j. On/Off-Automatic run switch.

Battery Charger

The battery charger shall be a SCR design, internally fused, with control to automatically charge and maintain the starting battery. The charger shall have a maximum charge rate of 2A at 12V and automatically taper to trickle charge. There shall be a manually set timer to provide an equalize charge for periods up to 12-hours.

Fuel System

A. Fuel Oil Storage: Comply with NFPA 30.

B. Base-Mounted Fuel Oil Tank: Factory installed and piped, complying with UL 142 fuel oil tank. Features include the following:

1. Tank level indicator.
2. Capacity: Fuel for 24 hours' continuous operation at 100 percent rated power output.
3. Vandal-resistant fill cap.
4. Containment Provisions: Comply with requirements of authorities having jurisdiction.
5. In line fuel oil solenoid valve shall be code compliant in accordance with NFPA 37.

655.03 Construction

A. Standby emergency generator shall be installed in compliance with the requirements of Article 700 of NFPA 70 - National Electrical Code. All fueling connections shall be in accordance with NFPA 37 Chapter 4-3. All connections and controls shall be complete to form a complete, operable system.

B. The Contractor shall engage the services of a qualified factory Engineer to confirm the compliant installation of standby electric generator and to also instruct Authority's personnel as to operation and maintenance of complete system. A minimum of four hours training shall be provided to demonstrate proper generator system operation and servicing.

C. Furnish Engineer with manufacturer's certification and warranty assuring each item of equipment is complete and in good condition, free from damage, properly installed, connected, adjusted and tested as to full power rating, stability and voltage and frequency regulation.

Final System Inspection and Test

A. After the systems and equipment are completely installed and, at such time as the Engineer may direct, the Contractor shall conduct an operating test for approval and acceptance by the Authority. The test shall be performed in the presence of and witnessed by the Engineer. Advance approval of equipment or materials will not constitute a waiver of the requirements that the equipment or materials shall be demonstrated to operate in accordance with these Specifications.

B. The test shall be resistant load bank test. The load bank shall be adjustable resistive loads and shall be provided, as a part of this Contract, by the Contractor. The engine generator is to be tested under the following loads and durations:

1. 50 percent load for one-hour.

2. 75 percent load for one-hour.

3. 100 percent load for two-hours.

C. Provide written test data to the Engineer.

Final Cleaning

Clean engine and generator surfaces.

Change the oil and replace the oil filter(s).

655.04 Maintenance Service

A. Initial Maintenance Service: Beginning at Substantial Completion, provide 12 month's full maintenance by skilled employees of manufacturer's designated service organization. Include quarterly exercising to check for proper starting, load transfer, and running under load. Include routine preventive maintenance as recommended by manufacturer and adjusting as required for proper operation. Provide parts and supplies same as those used in the manufacture and installation of original equipment.

655.05 Demonstration

A. Engage a factory-authorized service representative to train the Authority's maintenance personnel to adjust, operate, and maintain generator.

SPECIAL PROVISIONS

SECTION 655

ELECTRICAL

(Generator Automatic Transfer Switch)

655.01 Description

The work consists of furnishing and delivering an Automatic Transfer Switch (ATS) device at Auburn Utility Building. Installation of the new ATS will be done by others in the new Utility Building and includes providing and installing wire and conduit from the new ATS to the power distribution system in the new Utility Building.

655.02 Materials

All materials shall be new and comply with NEMA, UL and NEC standards, listings and requirements as applicable. The completed installation shall conform to NFPA 70 Article 700 requirements for emergency electrical systems. The ATS shall be listed under UL Standard 1008.

655.021 Submittals

The following specific requirements are in addition to Section 105.02 of the State of Maine Standard Specifications GENERAL PROVISIONS and the GENERAL and SPECIAL PROVISIONS of this Contract.

Shop Drawings prepared by the Contractor shall include plan and elevation views with overall and point dimensions and electrical diagrams including schematic and interconnection diagrams. The manufacturer's product data for transfer switches shall show overall dimensions, electrical connections, electrical ratings and compliance with environmental constraints. The installation instructions prepared by the manufacturer shall be provided.

The following operation and maintenance data prepared by the manufacturer shall be provided:

1. Instructions for operating equipment.

2. Identification of operating limits which may result in hazardous or unsafe conditions.

3. Document ratings of equipment and each major component.

4. Routine preventive maintenance and lubrication schedule.

5. List of special tools, maintenance materials and replacement parts.

Acceptable Manufacturers

A. Cummins Power Generation
B. Caterpillar Engine Division
C. Kohler Co. Generator Division
D. Automatic Switch Co.

Automatic Transfer Switch Characteristics

A. Standard automatic transfer switches rated for 120/240 volts, 2 pole, 200 amp minimum.

B. The complete automatic transfer switch shall be designed and tested by manufacturer. It shall include necessary relays and component parts, together with electrically and mechanically interlocked switch and shall provide the following functions:

1. Upon power line outage, automatically start generator and when generator comes up to voltage, disconnect load circuits from main line and transfer them to standby generator output.

2. Upon normal power line, return transfer load back to line and stop generator.

3. Rating of transfer switch shall be sufficient to handle capacity of loads being transferred and allow for short circuit currents of 20 times full load rating for one second.

4. Automatic transfer switch shall be mechanically held, electrically operated type rated for continuous duty in an unventilated sheet metal enclosure. The switch shall be double throw having electrically operated normal-emergency positions inherently interlocked mechanically and with main contacts mechanically attached to a common shaft. A manual operator shall be provided.

5. All main contacts shall be silver alloy wiping-action type. They shall be protected by arcing contacts. All switch and relay contacts, coils, springs and control elements shall be removable from the front of the transfer switch without removal of the switch panels from the enclosure and without disconnection of drive linkages or power conductors. Sensing and control relays shall be continuous duty industrial control type with minimum contact rating of 10 amperes.

6. Under voltage Protection: Solid state voltage sensitive devices shall be provided to monitor normal power source and signal emergency power to start and assume load, on a partial loss of power on any phase or where feedback voltages exist. These shall have calibrated dial adjustments and be temperature compensated for a maximum deviation of ±2 volts, from -25º F to 175º F

7. Time Delay to Start Emergency Power: A time delay, adjustable from 0.5 to six seconds, shall be provided to prevent emergency power from needless

starting and stopping during periods of momentary voltage fluctuations from normal power source. Preset at three second.

8. Time Delay to Pick-up Load: A time delay, adjustable from zero seconds to 50 seconds, shall be provided to prevent emergency power from accepting load until emergency power operates unloaded for a predetermined period of time. Preset at ten seconds.

9. Time Delay to Retransfer Load: After normal power has returned to service, a time delay adjustable from one minute to thirty minutes shall be provided to delay retransferring load to normal power for purpose of (a) overriding initial voltage fluctuations of returning normal power and (b) providing a predetermined minimum period of operating time for emergency power. If generator should fail during delay period, time delay shall be bypassed and load instantly retransferred to normal power. Preset at 15 minutes.

10. Time Delay to Stop Engine: After load has been retransferred to normal power, a time delay, adjustable from one minute to 30 minutes, shall be provided to allow engine to cool by permitting generator to operate unloaded for a predetermined period of time before shutdown. Preset at 15 minutes.

11. Automatic Exerciser: Means shall be provided to automatically start and run generator for a set period of time for purpose of testing or exercising complete engine, alternator and load transfer control. After completion of set period of time for testing and exercising, emergency source shall be automatically shutdown. Such periods for testing or exercising shall be adjustable in multiples of 15 minutes per period with period repeated on any combination of days over a cycle of seven days before recycling. Preset the transfer switch to test and exercise the generator system for every Wednesday at 8:00 AM.

    During period of testing or exercising, emergency power shall assume load.

12. Test Switch: Provide to simulate a normal source failure.

13. Disconnect Device: Provide means to electrically disconnect control section from transfer switch to permit safe access for maintenance or service of control, during periods of normal operation.

14. Normal and Emergency Lamps: Colored indicating lights shall be provided on the enclosure door and labeled to indicate transfer switch position: Green - normal source; Red - emergency.

15. Provide two auxiliary contacts, one to close and the other to open when normal source fails in addition to any contacts needed to accomplish the requirements of this Contract.

655.03 Construction

The ATS shall be installed and connected by others in accordance with the manufacturer's recommendations and the NEC including NEC Article 700.

The Contractor shall engage the services of a qualified factory Engineer from the manufacturer of the engine generator to personally supervise the compliant connections and integration of the ATS to the engine generator and to instruct the Authority's personnel in the operation and maintenance of complete system.

The Contractor shall furnish the manufacturer's certification and warranty assuring each item of equipment is complete and in good condition, free from damage, properly installed, connected, adjusted and tested.

Final System Inspection and Test

After the systems and equipment are completely installed and, at such time as the Engineer may direct, the Contractor shall conduct an operating test for approval and acceptance by the Authority. The test shall be performed in the presence of the Engineer. Advance approval of equipment or materials will not constitute a waiver of the requirements that the equipment or materials shall be demonstrated to operate in accordance with these Specifications.

Final Cleaning

Clean ATS and touch up any marred surfaces.

SPECIAL PROVISION

SECTION 655

ELECTRICAL

(Generator and Equipment)

655.01 Description

The work includes furnishing and delivery of a new 60 kW diesel generator, automatic transfer switch, and associated mechanical and electrical components; along with all other work and incidental items necessary to complete the Scope of Work in accordance with these Specifications, or as directed by the Project Engineer/Inspector.

Unless otherwise specified, or stated in the Contract Documents, the Contractor shall furnish, deliver, and pay for all material, labor, tools, equipment, transportation, permit fees, all other services, facilities, and cost necessary to execute and complete all work required by the Contract Documents.

It is not the intent herein to describe all the details and items for the furnishing of the generator and other system components. The Contractor is responsible to furnish and delivering all items and details necessary to complete this Contract. This includes the submission of Shop Drawings for approval by the Engineer.

655.02 Codes, Regulations, and Standards

The Contractor shall assume full responsibility and liability for compliance with all applicable Federal, State and local codes, regulations and standards pertaining to work practices, protection of workers and visitors to the site, and persons occupying areas adjacent to the site. This includes modification of procedures to comply with changes to codes, regulations and standards that occur during the work of this Contract. The Contractor shall hold the Authority's Representatives harmless for failure to comply with any applicable work, safety, health or other regulation on the part of himself, his employees or his Subcontractors.

655.03 Submittals

Provide submittal, warranty information, product data, and samples as outlined in the electrical sections.

Submit samples and/or printed descriptive literature of all materials for approval by the Engineer. The Contractor shall not commence delivery until materials approval has been obtained from the Engineer.

There shall be no deviations made from the manufacturer's specification or the approved materials without prior written approval by the Engineer.

655.04 Utility Building Generator - Materials

See the individual Specification sections 655 (Utility Building Generator) and 655 (Generator Automatic Transfer Switch) for material requirements.

655.05 Construction

See the individual Specification sections 655 (Utility Building Generator) and 655 (Generator Automatic Transfer Switch) for construction requirements.

Central Maine Power (CMP) line power shall be available to the Interchange ITS and Toll Systems at all times.

This project is subject to compliance with all requirements of the Occupational Safety and Health Administration (OSHA). All work on this project must meet the requirements of all applicable Federal, State and local codes, laws and ordinances.

655.06 Method of Measurement

The furnishing and delivery of a new 60 kW generator, automatic transfer switch, miscellaneous mechanical and electrical components, and start up testing will be measured as one lump sum complete and accepted, as outlined in the Specification, or as directed by the Engineer.

655.07 Basis of Payment

The furnishing and delivery of a new 60 kW generator, automatic transfer switch, miscellaneous mechanical and electrical components, and start-up testing will be paid for at the Contract lump sum price, which shall be payment in full for furnishing all materials, labor, equipment and incidentals necessary to satisfactory complete the work, as shown on the Contract Plans and described in the Specifications.

Payment will be made under:

Pay Item		Pay Unit
655.94	Generator and Equipment	Lump Sum

SPECIAL PROVISION

SECTION 655

ELECTRICAL

(Utility Building Electrical)

655.01 Description

This item shall consist of the furnishing of all building equipment, electrical service, lighting fixtures and lamps, heating, cooling and ventilation, wiring, panelboard, disconnect switches, conduit and grounding systems. This work shall also include the marking and labeling of equipment and the labeling or tagging of wiring; the testing of the installation; and the furnishing of all incidentals necessary to place it in operating condition as a completed unit to the satisfaction of the Maine Turnpike Authority's Representative (Engineer).

The following Specifications are intended to describe the work to be performed and the quality of the work, but may not specifically cover all the details of the work, equipment, accessories, and materials. They are, however, intended to cover the materials, equipment, apparatus, and erection of a complete electrical system whether specifically mentioned or not.

Provide required electrical work associated with electrical systems for a new Utility Building. Work shall include the following:

A. Provide primary electrical service 120/240 volt, 1-phase, 3 wire, 250 amp.
B. Provide a 120/240 volt, 1-phase, 4-wire 250 amp underground secondary electrical service from the adjacent generator.
C. Provide 250 amp clean and dirty electrical circuit breaker panelboards.
D. Provide electrical branch circuit connections to mechanical systems equipment.
E. Provide thermostat controlled heating, cooling, and ventilation system.
F. Provide interior and exterior lighting and associated wiring.
G. Provide wiring devices and associated wiring.
H. Provide network wiring outlets and associated wiring.
I. Provide a lightning protection system.

Furnish all materials, labor, tools, transportation, incidentals, and appurtenances to complete in every detail and leave in working order all items of work called for herein or shown on the accompanying drawings.

Include any minor items of work necessary to provide a complete and fully operative electrical system.

655.02 References

A. ANSI C80.3 - Electrical Metallic Tubing, Zinc-Coated.
B. ANSI / NEMA FB 1 - Fittings and Supports for Conduit and Cable Assemblies.
C. ANSI / NFPA 70 - National Electrical Code.
D. ANSI / NFPA 101 - Life Safety Code.

E. NEMA OS-1 – Sheet Steel Outlet Boxes, Device Boxes, Covers and Box Supports.
F. NEMA WD 1 – General Purpose Wiring Devices.
G. NEMA TC 2 – Schedule 80 PVC conduit
H. NFPA 780 – Standard for the Installation of Lightning Protection Systems
I. UL 38 – Manually Actuated Signaling Boxes
J. UL 50 – Cabinets and Boxes
K. UL 96A – Installation Requirements for Lightning Protection Systems

655.03 General Requirements

Contractor shall read the entire specifications covering other branches of work. He is responsible for coordination of his work with work performed by other trades.

Install Work in locations shown on Drawings, unless prevented by Project conditions.

Consult all Contract drawings which may affect the location of any equipment or apparatus furnished under this work and make minor adjustments in location as necessary to secure coordination.

System layout is schematic and exact locations shall be determined by structural and other conditions. This shall not be construed to mean that the design of the system may be arbitrarily changed. The equipment layout is to fit into the building as constructed and to coordinate with equipment included under other Divisions of work.

Contractor shall contact the Owner's Representative immediately if he notices any discrepancies or omissions in either the drawings or the specifications, or if there are any questions regarding the meaning or intent thereof.

Submit all changes, other than minor adjustments, to the Owner for approval before proceeding with the work.

Prepare drawings showing proposed rearrangement of Work to meet Project conditions, including changes to Work specified in other Sections. Obtain permission of Owner before proceeding

Contractor shall meet with the Owner's Representative on site prior to rough-in of electrical to verify location of lighting fixtures, wiring devices.

Where wire and cable routing is not shown, and destination only is indicated, determine exact routing and lengths required.

Contractor shall be responsible for provision of temporary electrical power and lighting as required to facilitate construction work. All temporary electrical power and lighting shall be completely removed prior to substantial completion of the project.

655.04 Submittals

Submit shop drawings and product data grouped to include complete submittals of related systems, products, and accessories in single submittals.

Contractor shall check all shop drawings for dimensional correctness, interferences and conformance to specifications and plans. Stamp drawings "approved" and indicate when stipulated check has been made before forwarding them. Identify submittal data by project name and equipment identification number.

Record any changes in location of boxes, service runs, and similar construction on a set of prints and deliver them to the Owner's Representative upon completion of the work.

655.05 Regulatory Requirements

Complete installation shall conform with all applicable Federal, State and Local laws, Codes and Ordinances, included but not limited to latest approved editions of the following:

A. State Building Codes.
B. Specific Construction Safety Requirements, State Industrial Commission.
C. National Electrical Code (NFPA 70).
D. Life Safety Code, NFPA 101.
E. Occupational Safety and Health Act (OSHA) of 1971 and all amendments thereto.
F. Local Building Code(s).
G. Maine Turnpike Authority Standards

Nothing contained in the drawings and specifications shall be construed to conflict with these laws, codes, and ordinances and they are thereby included in these specifications.

The Contractor shall visit the site to become familiar with all existing conditions affecting this work. No claim will be recognized for extra compensation due to failure of Contractor to familiarize himself/herself with the conditions and extent of proposed work.

Obtain permits. Request inspections from authority having jurisdiction.

655.06 Owner Provided Equipment

The following equipment will be provided by the Maine Turnpike Authority and installed by the Contractor per manufacturer's requirements and as directed by the Engineer:

A. Uninterrupted Power Supply (UPS)
B. Bypass Switch for the UPS.

655.07 Warranties

All work performed and all material and equipment furnished under this contract shall be free from defects and shall remain so for a period of at least one (1) year from the date of acceptance.

655.08 Materials

Main Service Circuit Breaker

Provide NEMA 4XSS, 250 ampere 2 pole, 240 volt, circuit breaker for power service. Ground will be per National Electrical Code. Breaker shall have an interrupting rating in RMS symmetrical amperes at 240 volts that exceeds the available fault current. Provide documentation of available fault current with Shop Drawings or submission will be rejected.

Grounding

The grounding system shall comply with applicable local electrical code requirements of the authority having jurisdiction, and NEC as applicable to electrical grounding and bonding, pertaining to systems, circuits and equipment.

Comply with applicable requirements of UL Standards No.'s 467, "Electrical Grounding and Bonding Equipment", and 869 "Electrical Service Equipment", pertaining to grounding and bonding of systems, circuits and equipment. In addition, comply with UL STD 486A, "Wire Connectors and Soldering Lugs for Use with Copper Conductors". Provide grounding and bonding products which are UL-listed and labeled for their intended usage.

Comply with applicable requirements and recommended installation practices of IEEE Standards 80, 81, 141 and 142 pertaining to grounding and bonding of systems, circuits and equipment.

Except as otherwise indicated, provide electrical grounding and bonding systems indicated; with assembly of materials, including, but not limited to, cables/wires, connectors, solder less lug terminals, grounding electrodes and plate electrodes, bonding jumper braid, and additional accessories needed for a complete installation. Where more than one type component product meets indicated requirements, selection is Installer's option. Where materials or components are not indicated, provide products which comply with NEC, UL, and IEEE requirements and with established industry standards for those applications indicated.

Unless otherwise indicated, provide electrical grounding conductors for grounding system connections that match power supply wiring materials and are sized according to NEC.

A. Copper cable; strand dia. 0.045"; 0.187#/ft; 57,400 circular mils.
B. Copper solid strip; 0.051" thick; 1/2" wide.
C. Copper solid rod; 0.187#/ft.
D. Copper cable; strand dia. 0.045"; 14 strands.
E. Copper bus; 0.250" thick; 3" wide.
F. Copper solid rod; dia. 0.162".
G. Bonding Jumper Braid: Copper braided tape, constructed of 30-gauge bare copper wires and properly sized for indicated applications.
H. Flexible Jumper Strap: Flexible flat conductor, 480 strands of 30-gauge bare copper wire; ¾" wide, 9-½" long; 48,250 CM. Select braid with holes sized for 3/8" diameter bolts, and protect braid with copper bolt hole ends.

Ground Electrodes and Plates

A. Grounding Electrodes: Solid copper or copper cladded steel, 3/4" diameter by 10 feet.
B. Electrical Grounding Connection Accessories: Provide electrical insulating tape, heat shrinkable insulating tubing, welding materials, bonding straps, as recommended by accessories manufacturers for type service indicated.
C. Field Welding: Comply with AWS Code for procedures, appearance, and quality of welds; and for methods used in correcting welding work. Provide welded connections where grounding conductors connect to underground grounding and plate electrodes.

Electrical Equipment

Panelboards, disconnect switches, lighting fixtures, relays, terminal blocks, circuit breakers, and all other regularly used commercial items of electrical equipment shall conform to the applicable rulings and standards of the Institute of Electrical and Electronic Engineers or the National Electrical Manufacturers Association. When specified, test reports from a testing laboratory indicating that the equipment meets the Specifications shall be supplied. In all cases, equipment shall be new and first-grade product. This equipment shall be supplied in the quantities required for the specific project and shall incorporate the electrical and mechanical characteristics specified in the Proposal and Plans.

Wire

Wire for ratings up to 600 volts, thermoplastic wire conforming to Federal Specification J-C-30, Type XHHW-2 shall be used where installed within conduits or wireways. All electrical conducting wire shall be copper, no aluminum shall be allowed. The wires shall be of the type, size, number of conductors, and voltage shown on the Plans. Wiring that is to be direct buried (if any) shall have an insulation system approved by the NEC for direct burial.

A. Control Circuits. Wire shall be not less than No. 12 AWG and shall be insulated for 600 volts. If telephone control cable is specified, No. 19 AWG telephone cable conforming to the United States Department of Agriculture, Rural Electrification Administration (REA) Bulletin 345-14 shall be used.

B. Power Circuits. 600 volts maximum--Wire shall be NO.6 AWG or larger and insulated for at least 600 volts.

Panel Boards

Manufacturers shall be regularly engaged in manufacture of panelboards and enclosures, of types, sizes, and ratings required, whose products have been in satisfactory use in similar service for not less than 5 years.

Installers shall have at least three (3) years of successful installation experience on projects utilizing panelboards similar to those required for this project.

Codes and Standards

A. Comply with applicable local code requirements of the authority having jurisdiction and NEC Article 408 as applicable to installation, and construction of electrical panelboards and enclosures.
B. Comply with applicable requirements of UL 67, "Electric Panelboards", and UL's 50, 869, 486A, 486B, and 1053 pertaining to panelboards, accessories and enclosures. Provide panelboard units which are UL-listed and labeled.
C. Comply with NEMA Stds Pub/No. 250, "Enclosures for Electrical Equipment (1000 Volts Maximum)," Pub/No. PB 1, "Panelboards", and Pub/No. PB 1.1, "Instructions for Safe Installation, Operation and Maintenance of Panelboards Rated 600 Volts or Less".

Federal Specification Compliance: Comply with FS W-P-115, "Power Distribution Panel", pertaining to panelboards and accessories.

Subject to compliance with requirements, provide panelboard products of one of the following (for each type and rating of panelboard and enclosure):

A. Square D Company.
B. General Electric Company.
C. Siemens Electric

Except as otherwise indicated, provide panelboards, enclosures and ancillary components, of types, sizes, and ratings indicated, which comply with manufacturer's standard materials; with the design and construction in accordance with published product information; equip with proper number of unit panelboard devices as required for complete installation. Where types, sizes, or ratings are not indicated, comply with NEC, UL and established industry standards for those applications indicated.

Power panelboards shall be dead-front safety type lighting and appliance panelboards as indicated, with switching and protective devices in quantities, ratings, types and arrangements shown; with anti-burn solder less pressure type lug connectors approved for use with copper conductors; construct unit for connecting feeders at top of panel; equip with copper bus bars, full-sized neutral bar, with bolt-in type heavy-duty, quick-make, quick-break, single-pole / dual-pole circuit breakers, with toggle handles that indicate when tripped. Provide suitable lugs on neutral bus for each outgoing feeder required; and provide bare un-insulated grounding bars suitable for bolting to enclosures. Select enclosures fabricated by same manufacturer as panelboards, which mate and match properly with panelboards.

Panelboard enclosures shall be galvanized sheet steel cabinet type enclosures, in sizes and NEMA types as indicated, code-gauge, minimum 16-gauge thickness. Construct with multiple knockouts and wiring gutters. Provide fronts with adjustable trim clamps, and doors with flush locks and keys, all panelboard enclosures keyed alike, with concealed piano door hinges and door swings as indicated. Panelboards shall utilize "door-in-door" type fronts. Equip with interior Circuit-directory frame, and card with clear plastic covering. Provide baked gray enamel finish over a rust inhibitor coating. Design enclosures for surface mounting. Provide enclosures which are fabricated by same manufacturer as panelboards, which mate and match properly with panelboards to be enclosed.

Molded-case circuit breakers shall be factory-assembled, molded-case circuit breakers of frame sizes, characteristics, and ratings including RMS symmetrical interrupting ratings indicated. Select breakers with permanent thermal and instantaneous magnetic trip, and with fault-current limiting protection, ampere ratings as indicated. Construct with over center, trip-free, toggle-type operating mechanisms with quick-make, quick-break action and positive handle trip indication. Construct breakers for mounting and operating in any physical position, and operating in an ambient temperature of 40 degree C. Provide breakers with mechanical screw type removable connector lugs, CU rated.

Minimum integrated short circuit rating - 22,000 amperes RMS symmetrical @ 240 volts, 35,000 amperes at 480 volts. Higher interrupting capacity rated breakers shall be provided if the available fault current exceeds indicated values. This shall be at no added cost to the Owner. Provide calculated fault current with Shop Drawing submittal, or Shop Drawings will be returned without review or approval.

A. Panelboard DP1 (Dirty Power):
   1. 120/240 volts, 1-phase, 4-wire, 250-ampere bus, 250-ampere, 2-pole main circuit breaker.
   2. Branch Circuit Breakers: Per attached panel board schedules.

B. Panelboard CP1 (Clean Power):
   1. 120/240 volts, 1-phase, 4-wire, 150-ampere bus, main lugs only.
   2. Branch Circuit Breakers: Per attached panel board schedules.

Surge Arrestor

Provide high capacity 120/240 volt surge arrestors built into the main service panelboard (VP) or in a separate enclosure adjacent to the panelboard. Unit shall be equivalent to "Surgelogic" TVSS be Square D and shall be rated not less than 320kA.

Disconnect (Safety) Switches

Work specified in this section shall consist of furnishing and installing disconnect switches.

A. Disconnect switches shall be heavy duty type. The switches shall be quick-make, quick-break type that during normal operation of the switch, the operation of contacts shall not be capable of being restrained by the operating handle after the closing or opening action of the contacts has started. Provision for padlocking the switch in the "OFF" position with at least three locks shall be provided. Provide with grounding lug.
B. Switches shall have a dual cover interlock to prevent unauthorized opening of the switch door when the handle is in the "ON" position, and to prevent closing of the switch mechanism when the door is open. Means shall be provided to permit authorized personnel to release the interlock for inspection purposes. Fused switches shall utilize Class R fuse holders.
C. Switches shall be rated 3 pole, single-throw, 600 volts with ampere rating as shown on the Plans. The UL listed short-circuit rating of the switch shall be 200,000 RMS symmetrical amperes when Class R or Class J fuses are used with the appropriate

rejection scheme.

D. Enclosure shall be NEMA 1 enclosed where mounted inside building area. Enclosure shall be NEMA 4X stainless steel if outdoors.

E. The finish shall be gray baked enamel, electrodeposited on clean phosphatized steel for NEMA 1 enclosed units.

F. The switches shall conform to NEMA KS1 and UL 98.

Wire Connectors and Devices

All wire joints shall be made with a pressure squeezed connector such as T & B Stakeon and Ideal, or bolted clamp such as made by Dessert. Twist-on type wire nuts are also permitted for general lighting and receptacle circuits only and only in dry locations. Wherever only a screw connector is available, installs a conductor terminal like T & B Stakeon spade or Ring terminals and designed for the application and compression set to the conductor.

Cover all joints made with non-insulated clamp devices with Scotch brand plastic electrical tape. Type #88 may be used at any joints and shall be used whenever the temperature of joint or the room is below 50°F. In the summer, or when temperature is above 60°F, new type #33 plus may be used. Triple wrap joints, each wrap having a 50% overlay.

Underground Electrical Services

Underground service shall comply with all the requirements of the National Electrical Code, and local enforcing authority.

Secondary service shall be cable in schedule 80 PVC plastic conduit or rigid galvanized conduit approved for electrical use. Conduit shall be 36" below grade and pitched to drain.

Install yellow detectable marking tape 12" above underground wiring.

Metering

A new meter socket for the 250 amp, 120/240v, one phase, 3 wire underground electrical service with enclosure shall be installed on the Utility Building in close proximity to the main disconnect and shall comply with all the requirements of the National Electrical Code, and local enforcing authority.

Switches and Plates

A. Switches shall be specification grade, 20 amperes at 120/240 volts, with ivory handle, such as Hubbell 1221-1, for SPST applications. For three-way use, No. 1223-1. All switches shall have clamp type terminals screw set, and shall have a green ground bond screw.

B. Mount all switches vertically, surface mount, and at a height of 4' 0", adjusted to minimize cut of tile or masonry unit, unless otherwise specified.

C. All switches must have machine screw held wire. Automatic grips will not be permitted. All switches must be classed as heavy duty.

D. All flush plates are to be ivory nylon plates, one-piece construction. Plates on surface boxes shall match boxes.

E. Switches and plates shall be a product of Bryant, General Electric or Hubbell.

Convenience and Other Outlets and Plates

A. Convenience outlets shall be duplex, specification grade, ivory face, side wired binding screw type, two pole, three wire, rated 20 amperes at 120 volts, Bryant 5362-1 or equal. Use Bryant smooth nylon plates or equal on all flush plates. Plates on surface boxes shall match boxes. Mount all outlets a minimum of 24" AFF.
B. Ceiling mounted outlets shall be specification grade, side wired binding screw type, two pole, three wire, rated 20 amperes at 120 volts, Hubbell L5-20R or equal. Plates shall match the boxes.
C. Ground Fault Receptacles shall be Bryant GFR 82FT-I, NEMA 5-20R configuration. Each receptacle noted as "GFI" is an individually protected receptacle.
D. Mount vertical outlets with grounding slot down. Outdoors and elsewhere as shown, use waterproof covers, Hubbell 5206 or equal, with double covers, spring held gasket. Mount the outlet horizontally.
E. Automatic grip set outlets are not permitted.
F. On exposed FS and FD boxes, use cast feraloy cover matching the box or stainless steel as above, if styled for the box. Outdoors and in damp locations, use weatherproof covers, Tay Mac, conforming to NEC 410-57b and U/L listed.
G. Outlets and plates shall be a product of Bryant, General Electric or Hubbell.

Outlet Boxes

A. For wiring to wall switches and duplex outlets, use steel boxes not less than 2 ¾" deep, such as Raco 663SM Series. Four-inch square or larger boxes are equally acceptable.
B. Ceiling and device outlet boxes shall be 4" octagonal by 2 1/8" deep or 4" square boxes.
C. All boxes shall be held to surfaces by screws.
D. Any outside boxes or interior boxes mounted exposed shall be cast metal type with integral threaded hubs, or where indicated as NEMA 4x shall be reinforced nonmetallic type with integral threaded hubs. Bell style boxes will not be accepted.

Lighting

A. Wire directly to an outlet box for each fixture in and on the building. General building wire is to be used to these outlets. From outlet into fixture, use silicone rubber, color coded to make up to fixture socket or ballast supply leads. And a bond wire to ground all fixtures.
B. All lighting shall be Light Emitting Diode (LED) type.
C. Interior lighting fixtures shall be 4-foot LED CREE WS4, or approved equal.
D. Exterior lighting shall be 180-degree 2-head motion activated (after dark only). Each fixture shall include a photocell.

Fuses

No fuses shall be allowed.

Underground Ducts – Power

All underground ducts shall be schedule 80 PVC of NEC approved size for the wiring contained.

Raceways

Provide labor, materials and equipment necessary to complete the work of this Section, including but not limited to the following:

A. Liquid-Tight Flexible Metal Conduit
B. Rigid Metal Conduit
C. Electric Metallic Tube Conduit (EMT)
D. Poly Vinyl Chloride (PVC)

The extent of raceway work is indicated by drawings and schedules.

Manufacturers shall be firms regularly engaged in manufacture of raceway systems of types and sizes required, whose products have been in satisfactory use in similar service for not less than 5 years.

Installers shall have at least three (3) years of successful installation experience on projects with electrical raceway work similar to that required for this project.

Comply with applicable requirements of NEMA Standards Publications pertaining to raceways.

Comply with applicable requirements of UL safety standards pertaining to electrical raceway systems. Provide raceway products and components which have been UL-listed and labeled.

Comply with applicable requirements of NEC pertaining to construction and installation of raceway systems.

Provide metal conduit, tubing and fittings of types, grades, sizes and weights (wall thicknesses) for each service indicated. Where types and grades are not indicated, provide proper selection determined by Installer and approved by the Owner, to fulfill wiring requirements, and comply with applicable portions of NEC for raceways.

Provide rigid steel, zinc-coated, threaded type conforming to FS WW-C-5S1, ANSI CSO.1 and UL 6. Zinc coating shall be fused to inside and outside walls.

Provide liquid-tight flexible metal conduit; constructed of single strip, flexible, continuous, interlocked, and double-wrapped steel; galvanized inside and outside; coat with liquid-tight jacket of flexible polyvinyl chloride (PVC).

Rigid metal conduit fittings shall be cast malleable iron, galvanized or cadmium plated, conforming to FS W-F-40S.

A. Use Type 1 fittings for rain tight connections.
B. Use Type 2 fittings for concrete tight connections.
C. Use Type 3 fittings for other miscellaneous connections.

Liquid-tight flexible metal conduit fittings shall be FS W-F-406, Type 1, Class 3, Style G. Provide cadmium plated, malleable iron fittings with compression type steel ferrule and neoprene gasket sealing rings, with insulated, or non-insulated throat.

Provide conduit, tubing and duct accessories of types, sizes, and materials, complying with manufacturer's published product information, which mate and match conduit and tubing.

Provide galvanized cast-metal conduit bodies of types, shapes and sizes as required fulfilling job requirements and NEC requirements. Construct conduit bodies with threaded-conduit-entrance ends, removable covers, either cast or of galvanized steel and corrosion-resistant screws.

Subject to compliance with requirements, provide conduit bodies of one of the following:

A. Killark Electric Mfg. Co.
B. O-Z/Gedney Div; General Signal Co.
C. Spring City Electrical Mfg. Co.

Wireway

Provide wireway in accordance with UL 870. Manufacture to JIC standards for Oiltight and Dustright Lay-in Wireway and to NMTBA standards for industrial Control Equipment.

Lengths and Fittings: Manufacture from 14-gauge steel or PVC, provide straight lengths with hinged covers with gasket. Hold covers closed with external latches. Installation of knockouts in either lengths or fittings is to be avoided.

Provide wireway that is suitable for "lay-in" conductors and with joint hardware assembly with each piece.

Provide sheet metal parts with inhibiting phosphate coating and baked enamel finish.

Pullboxes (if any)

Pullboxes shall comply with UL 50, "Electrical Cabinets and Boxes", for boxes over 100 cubic inch volumes. Boxes shall have screwed or bolted on covers of material same as box and shall be of size and shape to suit application.

Pullboxes shall be appropriate gauge steel with welded seams. Where necessary to provide a rigid assembly, construct with internal structural steel bracing.

Medium Voltage Splicing (if any)

No splicing of any electrical conducting wiring shall be allowed in conduit. All splicing shall comply with the following standards:

A. IEEE 48: "IEEE Standard Test Procedures and Requirements for High-Voltage Alternating Current Cable Terminations."
B. IEEE 400: "Guide for Making High-Direct-Voltage Tests on Power Cable Systems in the Field."
C. IEEE 404: "Standard for Power Cable Joints."
D. IEEE 592: "Standard for Exposed Semiconducting Shields on Pre-molded High Voltage Cable Joints and Separable Insulated Connectors."
E. UL 486A: "Wire Connectors and Soldering Lugs for Use with Copper Conductors."

Splicing shall be compatible with the cable materials.

Connectors: Compression type as recommended by cable or splicing kit manufacturer for the application.

Splicing and Terminating Kits: As recommended by the manufacturer in writing for the specific sizes, ratings, and configurations of cable conductor, splices, and terminations specified. Kits shall contain all components required for a complete splice or termination including detailed instructions and shall be the product of a single manufacturer. Completed splices and terminations shall provide insulation equivalent to the insulation class of the cable it connects.

Splices shall be made with standard splicing kits and shall be one of the following types:

A. Combination tape and cold shrink rubber sleeve kit with re-jacketing by cast epoxy resin encasement or other waterproof, abrasion-resistant material.
B. Heat shrink splice kit of uniform cross-section polymeric construction with outer heat shrink jacket.
C. Remolded, cold shrink rubber, inline splice kit.

Conductor Terminations, General: Comply with Class 1, 2, or 3 of IEE Standard 48, as indicated. Insulation class shall be equivalent to that of the cable upon which they are installed. Terminations for shielded cables shall include a shield grounding strap. Class 2 terminations and non-shielded cable termination shall include an effective moisture seal for the end of the insulation whether or not this item is included in termination kits. Seal shall be silicone rubber tape, cold shrink rubber sleeve, or heat shrink plastic sleeve as recommended by the kit manufacturer. Termination kits shall be performance tested for compliance with IEEE Standard 48 and shall be of the following types:

A. Class 1 Termination for Shielded Cable: Modular type, furnished as a kit, with stress relief tube, multiple molded silicone rubber insulator modules, shield ground strap, and compression-type connector.
B. Class 1 Termination for Shielded Cable: Heat-shrinkable type with heat-shrinkable inner stress control and outer non-tracking tubes, multiple molded non-tracking skirt modules, and compression-type connector.
C. Class 1 Termination for Shielded Cable: Modular type, furnished as a kit, with stress-relieving shield terminator; multiple-wet-process, porcelain, insulator modules; shield ground strap compression-type connector.
D. Class 1 Termination for Indoor Shielded Cable: Furnished as a kit with stress relief tube, non-tracking insulator tube, shield ground strap, compression-type connector,

and end seal.

E. Class 2 Termination for Shielded Cable: Furnished as a kit with stress relief tube, non-tracking insulator tube, shield ground strap, compression-type connector, and moisture end seal.

F. Termination for Non-shielded Cable: Furnished as a kit with compression-type connector and moisture end seal.

Requests for review of substitute items of material and equipment requiring different design loads will not be accepted by the Owner from anyone other than the Contractor. If the Contractor wishes to furnish or use a substitute item of material or equipment the Contractor shall make written application to the Owner for acceptance thereof, certifying that the proposed substitute will perform adequately the functions called for by the general design, be similar and of equal substance to that specified and be suited to the same use and capable of performing the same function as that specified. The application will state whether or not acceptance of the substitute for use in the work will require a change on the Plans or Specifications to adapt the design to the substitute and whether or not incorporation or use of the substitute in connection with the work is subject to payment of any license fee or royalty. All variations of the proposed substitute from that specified shall be identified in the application and available maintenance, repair and replacement service will be indicated. The application will also contain an itemized estimate of all costs that will result directly or indirectly from acceptance of such substitute, including costs of redesign and claims of other Contractors affected by the resulting change, all of which shall be considered by the Owner in evaluating the proposed substitute. The Owner may require the Contractor to furnish at the Contractor's expense additional data about the proposed substitute. The Owner will be the sole judge of acceptability, and no substitute will be ordered or installed without the Owner's prior written acceptance. The Owner may require the Contractor to furnish at the Contractor's expense a special performance guarantee or other surety with respect to any substitute.

The Contractor’s written application shall include the following:

A. A statement that a clear superiority of the substitute item (over that specified) exists, supported by certified test results, performance data and other evidence to supplement the requirements of the General Conditions or

B. If no superiority is claimed, the application shall also state the monetary credit to the Owner which will be allowed if the substitute item is accepted.

In order to aid the Owner in determining the equality of a proposed substitution (when compared to the item actually specified), the Contractor shall arrange for the performance of any tests requested by the Owner. The nature, extent, tester and supervisions of such tests including engineering costs, shall be borne by the Contractor. Certified test results shall be mailed directly to the Owner for all tests requested.

The Owner will record time required by Owner and Owner's consultants in evaluating substitutions proposed by or and in making changes on the Plans or Specifications occasioned thereby. Whether or not Owner accepts a proposed substitute, Contractor shall reimburse Owner for the changes of Owner and Owner's consultants for evaluating any proposed substitute.

Electric Unit Heater and Air Conditioner

Provide a new combined through wall air conditioner and heater, all associated conduit, wire and incidentals necessary for the unit function properly.

A. Unit shall be Bard W36HIA15 3 Ton, 208 volt, 1-phase, with 15kw backup heat
B. Unit shall be a self-contained and energy efficient heating and cooling unit
C. Unit shall be wall mounted to the exterior of the Utility Building
D. Unit shall have external provided thermostat

Exhaust Fan and Vent

Provide a new exhaust fan and vents with temperature controlled motorized louvers, all associated conduit, wire and incidentals necessary for the system function properly.

A. Exhaust fans shall be 12” diameter with an air changeover rate of 1,300 cubic feet per minute.
B. Vents shall have heavy-duty aluminum louvers
C. Vents shall have flange with mounting holes to secure unit to building wall
D. Vents shall operate both for intake and exhaust
E. Louvers shall be controlled by one motor that can be wired 110V/220V.
F. Unit shall have external provided thermostat

Generator

Refer to Item 655.94, Generator and Equipment, for generator requirements.

Backboard

Provide backboard for mounting all equipment for all electrical cabling. Backboards shall be a minimum of ¾ inch exterior grade plywood, firmly anchored to walls and with a paint finish in accordance with industry standards or directed by the Engineer.

Backboards are required on all interior walls and ceiling of the new building.

Network Wiring System

A. The network system components shall be provided by a single source from one of the following:
   1. *Amp*
   2. *Panduit*
   3. *Hubbell*
   4. *Hitachi / Superior Modular*
   5. Substitutions: Or Approved Equal

B. Integrated network system components shall include:
   1. Patch panels
   2. Patch cords

C. Fiber Panels – EIA nineteen inch, 48-port, wall-mounted UL listed patch panel for cross-connect of fiber cables.

D. Equipment System Grounding
1. Manufacturer: Provide products meeting the requirements of the Drawings and Specifications from one of the following manufacturers:
   a. *Belden* (No. 8669)
   b. Substitutions: Or Approved Equal
2. Jumper cable shall be hollow braided, 60-amp capacity, copper.
3. Jumpers shall have compression or exothermic type terminals on both ends of cables. Terminals shall be compatible with jumper cable material and equipment material in order to not have any degenerative reaction.

E. Equipment/Cable Identification
1. All equipment and cabling shall be properly identified by means of clear and concise labels. All identification shall meet or exceed the minimum requirements of EIA/TIA568A, 606 and BICSI standards.
2. Permanently label, using pre-printed labels, all cables and terminations. Handwritten or embossed type labels are specifically prohibited
   a. Label all equipment racks, panels and cross connect blocks uniquely.
   b. Label patch panels and cross connect blocks numerically, top-to-bottom.
   c. Label cable segments by designated incoming cable.
3. Provide color-coded labels with CODED identifiers as follows:
   a. Conduits and other pathways shall be labeled at all end points including equipment rooms, telecommunications closets, pull boxes and the like. Provide adhesive labels on the conduit with at least one label within each space that the conduit passes through. Labels shall be attached by means of the label adhesive and color-coded pressure-sensitive tape wrapped around conduit at least one and one half times.
   b. Cables shall have double lapped adhesive labels at all end points including Work Area Outlets, telecommunication closets and equipment rooms. Cables shall also have factory imprinted manufacturer's name, part number and the NRTL certified UL EIA/TIA category rating designation at a minimum of two foot (610mm) intervals along the entire length of the cable.
   c. Termination hardware shall have adhesive labels on both the front and rear (if accessible) of the hardware.
   d. Insert Labels shall be provided in each Work Area Outlet patch panel termination hardware (top of jack) cross connect blocks (edge of block) and the like.
   e. Outlet boxes, junction boxes and the like shall have adhesive labels attached on the inside and located where visible from the outlet opening.
   f. Grounding and bonding system shall have engraved labels at each ground bar and backbone grounding cable as it passes through each

room. Each bonding jumper shall have heat shrink labels at all end points.

4. Labels shall be constructed of approved material in order to meet the legibility, defacement, adhesion (adhesive labels only), and exposure requirements of UL 969. All labels shall be mounted horizontally in order to be read from left to right.
   a. Adhesive Labels shall be constructed of color-coded paper with a clear polyester over laminate, Brady USA, Inc. PermaShield, RayChem TMS or approved equal. Adhesive material used shall be approved for material being attached to, typeface shall be medium density, Helvetica, 1/8 inch (3mm) high black characters unless indicated otherwise.
   b. Heat-Shrink Labels shall be constructed of color-coded flame retardant, heat shrinkable polyolefin, Brady USA, Inc, RayChem TMS or approved equal. Typeface shall be medium density, Helvetica 1/8 inch (3mm) high black characters unless indicated otherwise.
   c. Insert Labels shall be constructed of color-coded paper inserted behind clear plastic label holder. Work Area Outlets shall have white color labels inserted behind a flush mounted (recessed) plastic window. Patch panels and cross connect block may have continuous clear plastic insertion strips label holders with label strips. Label strips shall have distinct markings to indicate where one jack or cross connect ends and the adjacent one starts. Typeface shall be medium density, Helvetica 1/8 inch (3mm) high black characters unless indicated otherwise.
   d. Handwritten or embossed labels are not allowed.

655.09 Construction Methods

The Contractor shall furnish and install and connect all specified equipment, equipment accessories, cables, wires, grounds and support necessary to insure complete and operable electrical systems as specified herein and shown on the Plans.

All work shall be performed in accordance with the Plans, these Specifications, the National Electric Code (NEC), and State and Local building codes.

All electrical materials shall be new and as approved by the Underwriters' Laboratories, Inc., except as otherwise specified herein. Defective equipment or equipment damaged in the course of the installation or during testing shall be replaced or repaired in a manner meeting the approval of the Engineer. The Plans indicate the extent and general arrangement of the equipment, conduit and wiring systems. If any departures from the Plans are deemed necessary by the Contractor, details of such departures and the reasons shall be submitted in writing to the Engineer for approval as soon as practicable and within 15 days after award of the Contract. No such departures shall be made without the prior written approval of the Engineer.

Panelboards

Examine areas and conditions under which panelboards and enclosures are to be installed,

and notify Engineer in writing of conditions detrimental to proper completion of work. Do not proceed with work until unsatisfactory conditions have been corrected in a manner acceptable to Installer.

Install panelboards and enclosures as indicated, in accordance with manufacturer's written instructions, applicable requirements of NEC standards and NECA's "Standards of Installation", and in compliance with recognized industry practices to ensure that products fulfill requirements.

Tighten connectors and terminals, including screws and bolts, in accordance with equipment manufacturer's published torque tightening values for equipment connectors. Where manufacturer's torque requirements are not indicated, tighten connectors and terminals to comply with tightening torques specified in UL Stds 486A and B.

Fasten enclosures firmly to walls and structural surfaces, ensuring that they are permanently and mechanically anchored.

Provide properly wired electrical connections for panelboards within enclosures.

Fill out panelboard's circuit directory card upon completion of installation work.

Provide equipment grounding connections for panelboard enclosures as indicated. Tighten connections to comply with tightening torques specified in UL 486A to assure permanent and effective grounds.

Prior to energizing of electrical circuitry, check all accessible connections to manufacturer's tightening torque specifications.

Prior to energizing of panelboards, check with ground resistance tester phase-to-phase and phase-to-ground insulation resistance levels to ensure requirements are fulfilled.

Prior to energizing, check panelboards for electrical continuity of circuits, and for short-circuits.

Adjust operating mechanisms for free mechanical movement.

Touch-up scratched or marred surfaces to match original finishes.

Subsequent to wire and cable hook-ups, energize panelboards and demonstrate functioning in accordance with requirements. Where necessary, correct malfunctioning units, and then retest to demonstrate compliance.

Raceway

Examine areas and conditions under which raceways are to be installed, and substrate which will support raceways. Notify Engineer in writing of conditions detrimental to proper completion of the work. Do not proceed with work until unsatisfactory conditions have been corrected in manner acceptable to Installer.

Install raceways as indicated; in accordance with manufacturer's written installation

instructions, and in compliance with NEC, and NECA's "Standards of Installation". Install units plumb and level, and maintain manufacturer's recommended clearances.

Coordinate with other work including wires/cables, boxes, and panel work, as necessary to interface installation of electrical raceways and components with other work.

Mechanically fasten together metal conduits, enclosures, and raceways for conductors to form continuous electrical conductor. Connect to electrical boxes, fittings and cabinets to provide electrical continuity and firm mechanical assembly.

Avoid use of dissimilar metals throughout system to eliminate possibility of electrolysis. Where dissimilar metals are in contact, coat surfaces with corrosion inhibiting compound before assembling.

Install miscellaneous fittings such as reducers, chase nipples, 3-piece unions, split couplings, and plugs that have been specifically designed and manufactured for their particular application. Install expansion fittings in raceways as required or wherever structural expansion joints are crossed.

Use roughing-in dimensions of electrically operated units furnished by supplier. Set conduit and boxes for connection to units only after receiving review of dimensions and after checking location with other trades.

Provide nylon pull cord in all empty conduits. Test conduits required to be installed, but left empty, with ball mandrel. Clear any conduit which rejects ball mandrel. Costs associated with the restoration of conduit and surrounding surfaces to original condition shall be incidental to the Precast Utility Building item.

Provide rigid steel zinc-coated conduit where conduit is installed exposed outdoors.

Use liquid-tight flexible conduit where indicated on the Plans.

Cut conduits straight, properly ream, and cut threads for heavy wall conduit deep and clean.

Field-bend conduit with benders designed for purpose so as not to distort nor vary internal diameter.

Size conduits to meet NEC, except no conduit smaller than 1/2 inch shall be embedded in concrete or masonry.

Fasten conduit terminations in sheet metal enclosures by 2 locknuts, and terminate with bushing. Install locknuts inside and outside enclosure.

Conduits are not to cross pipe shafts, or ventilating duct openings.

Use of running threads at conduit joints and terminations is prohibited. Where required, use 3-piece union or split coupling.

Complete installation of electrical raceways before starting installation of cables/wires

within raceways.

Install underground conduits minimum of 36" below finished grade, unless otherwise indicated on the Plans.

Install exposed conduits and extensions from concealed conduit systems neatly, parallel with, or at right angles to walls of building.

Install exposed conduit work as not to interfere with ceiling inserts, lights or ventilation ducts or outlets.

Support exposed conduits by use of hangers, clamps, or clips.

Conduit Fittings

Construct locknuts for securing conduit to metal enclosure with sharp edge for digging into metal, and ridged outside circumference for proper fastening.

Bushings for terminating all conduits are to have flared bottom and ribbed sides, with smooth upper edges to prevent injury to cable insulation.

Install insulated type bushings for terminating for all conduits. Bushings are to have flared bottom and ribbed sides. Upper edge to have phenolic insulating ring molded into bushing.

Bushing of standard or insulated type to have screw type grounding terminal.

Miscellaneous fittings such as reducers chase nipples, 3-piece unions, split couplings, and plugs to be specifically designed for their particular application.

Mechanically assemble metal enclosures, and raceways for conductors to form continuous electrical conductor, and connect to electrical boxes, fittings and cabinets as to provide effective electrical continuity and rigid mechanical assembly.

Avoid use of dissimilar metals throughout system to eliminate possibility of electrolysis. Where dissimilar metals are in contact, coat all surfaces with corrosion inhibiting compound before assembling.

Make changes in direction of raceway run with proper fittings, supplied by raceway manufacturer. No field bends of raceway sections will be permitted.

Properly support and anchor raceways for their entire length by structural materials. Raceways are not to span any space unsupported.

Use boxes as supplied by raceway manufacturer wherever junction, pull or devices boxes are required. Standard electrical "handy" boxes, etc. shall not be permitted for use with surface raceway installations.

Wiring and Connection

The Contractor shall make all necessary electrical connections in the building in accordance with the wiring diagrams furnished, all manufacturers requirements, and as directed by the Engineer to ensure a complete and operating system, whether shown on these documents or part of manufacturers schematics. In wiring to the terminal blocks, the Contractor shall leave sufficient extra length on each control lead to make future changes in connections at the terminal block. This shall be accomplished by running each control lead the longest way around the box to the proper terminal. Leads shall be neatly laced in place.

Marking and Labeling

All equipment, control wires, terminal blocks, etc., shall be tagged, marked, or labeled as specified below:

A. Wire Identification. The Contractor shall furnish and install self-sticking wire labels or identifying tags on all control wires at the point where they connect to the control equipment or to the terminal blocks. Wire labels, if used, shall be of the self-sticking preprinted type and of the manufacturer's recommended site for the wire involved. Identification markings designated in the Plans shall be followed. Tags, if used, shall be of fiber not less than 3/4 inch in diameter and not less than 1/32 inch thick. Identification markings designated on the Plans shall be stamped on tags by means of small tool dies. Each tag shall be securely tied to the proper wire by a nonmetallic cord.

B. Labels. The Contractor shall stencil identifying labels on the cases of regulators, breakers and distribution and control relay cases with white oil paint as designated by the Engineer. The letters and numerals shall be not less than 1 inch in height and shall be of proportionate width. The Contractor shall also mark the correct circuit designations in accordance with the wiring diagram on the terminal marking strips which are part of each terminal block.

Grounding and Bonding

Examine areas and conditions under which electrical grounding and bonding connections are to be made and notify Engineer in writing of conditions detrimental to proper completion of work. Do not proceed with work until unsatisfactory conditions have been corrected in a manner acceptable to Installer.

Installation of Electrical Grounding and Bonding Systems

Install electrical grounding and bonding systems as indicated, in accordance with manufacturer's instructions and applicable portions of NEC, NECA's "Standard of Installation", and in accordance with recognized industry practices to ensure that products comply with requirements.

Coordinate with other electrical work as necessary to interface installation of electrical grounding and bonding system work with other work.

Weld grounding conductors to underground grounding electrodes.

Connect together system neutral, service equipment enclosures, exposed noncurrent carrying metal parts of electrical equipment, metal raceway systems, grounding conductor in raceways and cables and receptacle ground connectors.

Terminate feeder and branch circuit insulated equipment grounding conductors with grounding lug, bus, or bushing.

Tighten grounding and bonding connectors and terminals, including screws and bolts, in accordance with manufacturer's published torque tightening values for connectors and bolts. Where manufacturer's torque requirements are not indicated, tighten connections to comply with tightening torque values specified in UL 486A to assure permanent and effective grounding.

Route grounding connections and conductors to ground and protective devices in shortest and straightest paths as possible to minimize transient voltage rises.

Apply corrosion-resistant finish to field-connections, buried metallic grounding and bonding products, and places where factory applied protective coatings have been destroyed, which are subjected to corrosive action.

Install clamp-on connectors on clean metal contact surfaces, to ensure electrical conductivity and circuit integrity.

Upon completion of installation of electrical grounding and bonding systems, test ground resistance with ground resistance tester. Where tests show resistance-to-ground is over 25 ohms, take appropriate action to reduce resistance to 25 ohms, or less, by driving additional ground rods; then retest to demonstrate compliance.

Wireways

Installation shall be in accordance with NEMA and manufacturers recommendations as described in the instruction accompanying the product.

Install wireways parallel with ceiling and structural members.

Pullboxes

Provide boxes and fittings in the wiring or raceway systems wherever required for pulling of wires, making connections and mounting of devices for metallic raceways shall be of the cast-metal hub type when located in normally wet locations, when surface mounted on outside of exterior surfaces, when installed exposed up to 7 feet above interior floors and walkways and when installed in hazardous areas. Boxes in other locations shall be sheet steel. Each box shall have the volume required by NFPA 70 for the number of conductors enclosed in the box. Provide gaskets for cast-metal boxes installed in wet locations and boxes installed flush with the outside of exterior surfaces. Fasten boxes and supports with wood screws on wood, with bolts and expansion shields on concrete or block, with toggle bolts on hollow masonry units, and with machine screws or welded studs on steel work. Threaded studs driven in by used, where use of this equipment complies with local safety regulations, in lieu of wood screws, expansion shields, or machine screws.

Medium Voltage Splicing

Install splices at pull points and elsewhere using standard kit. Conform to kit manufacturer's written instructions.

Electrical Inspections

The Contractor shall be responsible for scheduling all reviews, inspections and meetings with the Auburn Electrical Inspector and other agencies in conformance with the Contractor's electrical permit, the Auburn Building and Electrical Code, and other applicable federal, state and local codes. The Contractor shall obtain a Certificate of Occupancy for the electrical work and provide a copy to the Engineer prior to final payment for this item.

655.10 Method of Measurement

The new Equipment Building Electrical will not be measured separately for payment but shall be measured as a single item including furnishing and delivering the electrical system for the new utility building as required on the Plans and in this Specification, miscellaneous hardware and fittings, site coordination, all completed, tested, accepted, and ready for operation.

656.11 Basis of Payment

Payment will be made at the Lump Sum Contract unit price for the new Utility Building Electrical measured as specified above, which price and the payment thereof shall constitute full compensation for all labor, materials, equipment, incidentals and expenses necessary to complete the work.

Payment will be made under:

Pay Item		Pay Unit
655.951	Utility Building Electrical: Auburn	Lump Sum
655.952	Utility Building Electrical: Kennebunk	Lump Sum

SPECIAL PROVISION

SECTION 800

UTILITY BUILDING

800.01 Description

This work shall consist of furnishing and installing a precast concerete structure (utility building) in accordance with these Specifications, Plans, or as otherwise directed. The new utility building shall include furnishing and delivery a precast structure and miscellaneous hardware in accordance with the Plans, and this Specification. The construction of the utility building shall be in accordance with the design and dimensions shown on the Plans. This work shall include the painting of the building and the furnishing of all incidentals necessary to produce a completed utility building.

800.02 Utility Building - Materials

All materials covered by other referenced Specifications shall be subject to acceptance through manufacturer's certification of compliance with the applicable Specification, all applicable material certification shall be submitted to the Resident Engineer for review.

The following Specifications are intended to describe the work to be performed and the quality of the work, but may not specifically cover all the details of the work, accessories, and materials. They are, however, intended to cover the materials, apparatus, and erection of a complete structure whether specifically mentioned or not.

The utility building shall be a new concrete precast building as manufactured by a designated precast supplier. The 11'-0"W x 14'-0"L x 9'-0"H I.D. building shall be designed to meet all applicable building standards. The utility building will be installed according to the Plans and manufacturer's recommendations.

The building shall be equipped with the following: 3'0" x 7’0" exterior single door with BEST lock set and automatic door closure, interior insulation minimum R-14, interior plywood sheathing, and interior and exterior paint. The building shall also be equipped with an exterior mounted LED flood lamp.

The new foundation for the new Utility Building as indicated on the Plans.

Except as specified otherwise hereinafter, all work shall be done in accordance with the latest edition of the referenced Advisory Circulars and Orders.

Concrete

Cast in place concrete shall be 4,000 psi and in accordance with ACI 301, 305, 306, 315, 318.

Reinforced Steel

Reinforced steel bars shall be intermediate or structural grade deformed bars-type bars and shall meet the requirements of ASTM A 615.

Paint

a. White paint for the body and finish coats on metal and wood surfaces shall be ready-mixed paint conforming to Federal Specification IT-P-1 02.
b. Priming paint for wood surfaces shall be mixed on the job by thinning the above specified white paint by adding ½ pint (0.06 liter) of raw linseed oil to each gallon (liter).
c. Paint for the floor, ceiling, and inside walls shall be in accordance with Federal Specification IT-E-487. Walls and ceiling shall be light gray and the floor shall be medium gray.
d. The roof coating shall be hot asphalt material in accordance with Federal Specification SS-A¬694

Backboard

Provide backboard for mounting all equipment for all electrical cabling. Backboards shall be a minimum of ¾ inch exterior grade plywood, firmly anchored to walls and with a paint finish in accordance with industry standards or directed by the Engineer.
Backboards are required on all interior walls of the new building.

800.03 Construction

It is essential that the work required to provide a new Utility Building be properly planned and effectively managed in order to not interrupt operations at the MTA Auburn Interchange.

The Contractor shall furnish and deliver the utility building as specified herein and shown on the Plans.

All work shall be performed in accordance with the Plans, these Specifications and State and Local building codes.

If any departures from the Plans are deemed necessary by the Contractor, details of such departures and the reasons shall be submitted in writing to the Engineer for approval as soon as practicable and within 15 days after award of the Contract. No such departures shall be made without the prior written approval of the Engineer.

Building

The Contractor shall manufacture and deliver a new precast building to the location shown on the Plans. The building shall be delivered in one piece. Once the new foundation is completed, the utility building will be installed on the new foundation. Before installing the new building, the Contractor shall insure that all equipment and components are secure within the building so they will not be damaged during installation and that all penetrations are fabricated properly and in the correct location.

Roof

The roof shall be reinforced concrete as shown on the shop drawings. Reinforcing steel shall be placed as shown on the shop drawings and secured in position to prevent displacement during the placing of the concrete. The concrete shall be placed monolithically and shall be free of honeycombs and voids. The surface shall have a steel-trowel finish and shall be sloped as show on the Plans. The underside of the roof slab shall be finished in the same manner as specified for walls.

One brush or mop coat of hot asphalt roof coating shall be applied to the top surface of the roof slab. The asphalt material shall be heated to within the range specified by the manufacturer and immediately applied to the roof. The finished coat shall be continuous over the roof surface and free from holidays and blisters. Smears and dribbles of asphalt on the roof edges and building walls shall be removed.

Floor

The floor shall be reinforced concrete as shown on the Plans. The floor surfaces shall have a steel-trowel finish and sealed (see painting). The floor shall be level and without floor drains. A ¼ inch (6 mm) asphalt felt expansion joint shall be placed between floor and foundation. The floor shall be poured monolithically and shall be free of honeycombs and voids.

Conduit in Floor and Foundation

Conduits will be installed in the foundation in accordance with the details shown on the Plans; the Contractor shall insure the block outs in the floor slab for the entering/exiting conduits will align with the installed conduits.

Door

The Door shall be 3'0" x 7’0" exterior single door with lock set that will accept a BEST key core. The door shall be a metal-clad fireproof class A security door conforming to requirements of NFPA 80. An automatic door closure to be included as well.

Painting

The floor, ceiling, and inside walls of concrete construction shall first be given a hardening treatment, after which the Contractor shall apply two (2) coats of paint as specified below. The hardening treatment shall consist of applying two coats of either a commercial floor hardener or a solution made by dissolving two (2) pounds (0.9 kg) of magnesium fluosilicate or zinc sulphate crystals in one (1) gallon (liter) of water. Each coat shall be allowed to dry at least 48 hours before the next application. After the second treating coat has dried, the surfaces shall be brushed clean of all crystals and thoroughly washed with clear water. Paint for walls and ceiling shall be a light gray color approved by the Engineer. The floor paint shall be a medium gray color approved by the Engineer. Before painting, the surfaces shall be dry and clean. The first coat shall be thinned by adding 2/3-quart (0.166 liters) of spar varnish and 1/3-quart (0.083 liters) of turpentine to each gallon (liter) of paint. The second coat shall be applied without thinning. All doors, lintels, and

windows shall be cleaned to remove any rust or foreign material and shall be given one (1) body and one (1) finish coat of white paint.

800.04 Method of Measurement

The new Utility Building will not be measured separately for payment but shall be measured as a single item including furnishing and delivering the new pre-cast building as required on the Plans and in this Specification, miscellaneous hardware and fittings, site coordination, all completed, tested, accepted, and ready for operation.

800.05 Basis of Payment

Payment will be made at the Lump Sum Contract unit price for the new Utility Building measured as specified above, which price and the payment thereof shall constitute full compensation for all labor, materials, equipment, incidentals and expenses necessary to complete the work.

Payment will be made under:

Pay Item		Pay Unit
800.011	Utility Building: Auburn	Lump Sum
800.012	Utility Building: Kennebunk	Lump Sum

SPECIAL PROVISION

SECTION 830

HORIZONTAL DIRECTIONAL DRILLING

(3" HDPE Conduit Installation)

The following Section is added:

830.01 Description

The work specified in this Section consists of installing an underground conduit using Horizontal Directional Drilling (HDD), also commonly referred to as guided horizontal boring. This work shall include all services, equipment, miscellaneous materials, and labor for the complete and proper installation of the underground conduit. Ledge may be encountered during the HDD process.

HDD is required within the limits of the Project where the electrical and communications HDPE conduit as shown on the Plans.

830.02 References

The following publications and/or standards may be referenced in this Specification:

DCCA Directional Crossing Contractors Association Guidelines for a Successful Directional Crossing Bid Package.

830.03 Quality Assurance

Adherence to the Specifications contained herein, or the Resident's approval of any aspect of any directional drilling operation covered by this Specification, shall in no way relieve the Contractor of their ultimate responsibility for the satisfactory completion of the work authorized under the Contract.

830.04 Submittals

The Contractor shall submit to the Resident a Directional Drilling Submittal Package for review, comment, and approval prior to the commencement of work. At a minimum, the following components shall be submitted as part of the Submittal Package:

Work Plan: The Contractor shall submit to the Resident a general work plan outlining the procedure to be used to execute the Project. The work plan should document the staging area requirements; the location and description of pits, if needed; the proposed alignment of the boring; the method used to create the bore hole; and the method used to pull the conduit through the hole. Drilling alignment shall include lines and grades, entry and exit points, and drilling angles. The proposed entry and exit angles shall be checked against the bending radius of the conduit, and the longitudinal pulling force shall be checked against the allowable strength of the conduit during pullback. The work plan shall also include a general construction schedule and sequence in order

to coordinate this activity with the overall Project. Work which may require a shoulder closure or lane closure should be noted.

Equipment: The Contractor shall submit specifications on directional drilling equipment to ensure that the equipment will be adequate to complete the Project. Equipment used to locate and monitor the position of the drilling head shall also be provided in this submittal. Spares inventory shall be included.

Material: Include the slurry material description and material data safety sheets, and any miscellaneous materials needed to perform the work. An estimate of the volume of the slurry to be used and the location of the disposal facility shall be provided.

Personnel: Documentation of training and relevant experience of personnel shall be submitted. Indicate the number of years and/or projects that each individual has completed.

Environmental Controls: The Contractor shall indicate the environmental control devices that will be employed to ensure that no slurry or hydraulic fluids enter the drainage ditches on either side of the turnpike mainline or the interchange roadways. The manner by which slurry will be introduced and captured for proper disposal shall be outlined.

Warranty: A five-year warranty shall be provided on the work.

830.05 Drilling Equipment

The directional drilling equipment shall consist of a directional drilling rig of sufficient capacity to perform the bore and pullback the conduit; a drilling fluid mixing & delivery system of sufficient capacity to successfully complete the crossing; a guidance system to accurately guide boring operations; and trained and competent personnel to operate the system. All equipment shall be in good, safe operating condition with sufficient supplies, materials and spare parts on hand to maintain the system in good working order for the duration of this Project.

Drilling Rig: The directional drilling machine shall consist of a hydraulically powered system to rotate, push, and pull conduit into the ground at a variable angle while delivering a pressurized fluid mixture to a guidable drill (bore) head. The machine shall be anchored or secured to the ground to withstand the pulling, pushing and rotating pressure required to complete the crossing. The hydraulic power system shall be self-contained with sufficient pressure and volume to power drilling operations. Hydraulic system shall be free of leaks. Rig shall have a system to monitor and record maximum pull-back pressure during pull-back operations.

Drill Head: The drill head shall be steerable by changing its rotation and shall provide the necessary cutting surfaces and drilling fluid jets. The drill bit shall be equipped with a signal generator providing constant output for continuous path monitoring.

Mud Motors (if required): Mud motors shall be of adequate power to turn the required drilling tools.

Drill Pipe: Drill pipe shall be constructed of high quality tubing with threaded box and pins.

830.06 Guidance System

The guidance system shall be of a proven type and shall be setup and operated by personnel trained and experienced with this system. The Operator shall be aware of any magnetic anomalies and shall consider such influences in the operation of the guidance system if using a magnetic system.

830.07 Drilling Slurry

Mixing System: A self-contained, closed, drilling fluid mixing system shall be of sufficient size to mix and deliver drilling fluid composed of bentonite clay, potable water and appropriate additives. Mixing system shall be able to molecularly shear individual bentonite particles from the dry powder to avoid clumping and ensure thorough mixing. The drilling fluid reservoir tank shall be sized for adequate storage of the mud. Mixing system shall continually agitate the drilling fluid during drilling operations.

Drilling Fluids: Contractor shall supply and/or arrange for connection to supply water for mixing drilling fluid. Drilling fluid shall be composed of clean water and an appropriate additive. Water shall be from a clean source with a pH of 8.5 – 10 and/or as per mixing requirements of the Manufacturer. Water of a lower pH or with excessive calcium shall be treated with the appropriate amount of sodium carbonate or equal. The water and additives shall be mixed thoroughly and be absent of any clumps or clods. A bentonite based drilling slurry shall be utilized which may include polymer extenders. The slurry shall be a mixture that will harden into a stable clay substance around the outside of the conduit, leaving no voids and allowing no settlement of ground after installation. No hazardous additives may be used. Drilling fluid shall be maintained at a viscosity sufficient to suspend cuttings and maintain the integrity of bore wall. The slurry shall be recycled to minimize material and water requirements.

Delivery System: The mud pumping system shall have a minimum capacity to supply mud in accordance with the drilling equipment pull-back rating at a constant required pressure. The delivery system shall have filters in-line to prevent solids from being pumped into the drill pipe. Connections between the pump and drill pipe shall be relatively leak-free. Used drilling fluid and drilling fluid spilled during drilling operations shall be contained and properly disposed of. A berm, minimum of 12" high, shall be maintained around drill rigs, drilling fluid mixing system, entry and exit pits and drilling fluid recycling system (if used) to prevent spills into the surrounding environment. Pumps and or vacuum truck(s) of sufficient size shall be in place to convey excess drilling fluid from containment areas to storage facilities.

830.08 Commencement of Work

The Submittal Package shall be approved by the Resident prior to starting work. The Resident must be notified seven (7) days in advance of starting work. All personnel shall be fully trained in their respective duties as part of the directional drilling crew and in safety.

Prior to any alterations to work-site, Contractor shall photograph or video tape entire work area, including entry and exit points. The Contractor shall also survey the cross-section of the roadway for a distance of 20 feet to each side of the proposed drilling operation. Obtain grade elevations across the roadway no less than 10 in number, which shall be taken at the edge of pavements and at accessible lane lines. One (1) copy of the elevations shall be given to the

Resident and one (1) copy shall remain with the Contractor for a period of one year following the completion of the Project.

Work site as indicated on the drawings, within the right-of-way, shall be graded or filled to provide a level working area. No alterations beyond what is required for operations are to be made. Contractor shall confine all activities to designated work areas. No construction equipment shall be located within the 10 feet of the edge of pavement without approval from the Resident.

Entire drill path shall be accurately surveyed with entry and exit stakes placed in the appropriate locations within the areas indicated on drawings. If Contractor is using a magnetic guidance system, drill path will be surveyed for any surface geo-magnetic variations or anomalies.

Contractor shall place silt fence between all drilling operations and any drainage, wetland, waterway or other area designated for such protection by Contract Documents, State, Federal and local regulations. Hydraulic fluid and slurry is not permitted to enter any drainage ditch or water feature on-site. Additional environmental protection necessary to contain any hydraulic or drilling slurry shall be put in place, including berms, liners, sump pumps, turbidity curtains, and other measures. Contractor shall adhere to all applicable environmental regulations. Fuel or oil may not be stored in bulk containers within 200 feet of any water-body or wetland.

Contractor shall adhere to all applicable State, Federal and local safety regulations and all operations shall be conducted in a safe manner. Safety meetings shall be conducted at least weekly with a written record of attendance and topic submitted to Resident.

830.09 Drilling Procedure

The drilling alignment shall conform to the lines and grades indicated on the Drawings or as directed by the Resident. Ground entry and exit points shall be as shown on the Drawings or as approved, and angles shall not deviate by more than two degrees. Entry and exit points shall be within five feet of their intended locations. The alignment of the conduit shall remain at least 10 feet below the mainline traffic lanes and ramps at all times, and the depth of the bore head shall be monitored every 12 feet to 20 feet as dictated by traffic control. No monitoring shall be allowed in an active traffic lane. Directional bore depths less than 10 feet in areas of bedrock may be allowed but shall be approved by the Resident prior to drilling.

Pilot hole shall be drilled on bore path with no deviations greater than five percent of desired depth over a length of 100 feet. In the event that pilot does deviate from bore path more than five percent of depth in 100 feet, Contractor will notify Resident and Resident may require Contractor to pullback and re-drill from the location along bore path before the deviation.

In the event that a drilling fluid fracture, inadvertent returns, or returns loss occurs during pilot hole drilling operations, Contractor shall cease drilling, wait at least 30 minutes, inject a quantity of drilling fluid with a viscosity exceeding 120 seconds as measured by a March Funnel and then wait another 30 minutes. If mud fracture or returns loss continues, Contractor will cease operations and notify Resident. Resident and Contractor will discuss additional options and work will then proceed accordingly.

Upon successful completion of the pilot hole, Contractor will ream bore hole to no greater than 25 percent of the outside diameter of the conduit using the appropriate tools. Contractor will

not attempt to ream at one time more than the drilling equipment and mud system are designed to safely handle.

After successfully reaming bore hole to the required diameter, Contractor will pull the PVC conduit through the bore hole. In front of the conduit will be a swivel. Once pullback operations have commenced, operations must continue without interruption until conduit is completely pulled into borehole. During pullback operations, Contractor will not apply more than the maximum safe conduit pull pressure at any time. The Contractor shall not exceed the allowable bending radius of the conduit as specified by the conduit manufacturer.

In the event that conduit becomes stuck, Contractor will cease pulling operations to allow any potential hydro-lock to subside and will commence pulling operations. If conduit remains stuck, Contractor will notify Resident. Resident and Contractor will discuss options and then work will proceed accordingly.

In the event that the Contractor must abandon the drill hole before completion of the crossing, the Contractor will seal the hole and re-drill the crossing at no extra cost to the Authority.

830.10 Site Restoration

Following drilling operations, Contractor will demobilize equipment and restore the work site to original condition. All excavations will be backfilled and compacted to 95 percent of original density. Landscaping will be restored to original condition. All mud, cuttings, and slurry shall be properly contained, collected, and disposed of by the Contractor.

830.11 Record Keeping and Close Out

As-Builts: Contractor shall maintain a daily project log of drilling operations and a guidance system log with a copy given to Resident at completion of the Project. A final survey of elevations shall be completed by the Contractor of the mainline and ramp cross-section which shall accompany the as-built drawings.

Owner shall have access at all times to any measuring or gauging devices used for the horizontal drilling operation, as well as any drilling logs maintained by the Contractor.

830.12 Method of Measurement

Directional drilling will be measured by the horizontal linear foot.

830.13 Basis of Payment

The accepted quantity of Horizontal Directional Drilling will be paid for at the Contract unit price per horizontal linear foot. No adjustment will be made for vertical depth or parabolic draping of the drilled hole or for encountering ledge. Payment shall be full compensation for labor, equipment and materials to complete the surveying, excavations, pits, drilling, environmental controls, installation of conduit, and site restoration. Payment shall also include full compensation for disposing of unsuitable and surplus soils, slurry, and materials. PVC conduit will not be paid for under Horizontal Directional Drilling, but rather will be paid for under the corresponding Electrical pay item.

Payment will be made under:

Pay Item		Pay Unit
830.25	Horizontal Directional Drilling, 3-inch HDPE Conduit	Linear Foot

APPENDIX A

ENVIRONMENTAL PERMITS

DEPARTMENT OF THE ARMY
GENERAL PERMIT FOR
THE STATE OF MAINE

The New England District of the U.S. Army Corps of Engineers (Corps) hereby issues a General Permit (GP) for activities subject to Corps jurisdiction in waters of the U.S. within the boundaries of the State of Maine. This GP is issued in accordance with Corps regulations at 33 CFR 320 - 332 [see 33 CFR 325.2(e)(2)]. This GP authorizes activity-specific categories of work that are similar in nature and cause no more than minimal individual and cumulative adverse environmental impacts. Refer to Page 2 for the list of activities and Appendix A for activity specific conditions of eligibility in inland and tidal waters.

I. GENERAL CRITERIA

1. In order for activities to qualify for this GP, they must meet the GP's terms and eligibility criteria (Pages 1–4), General Conditions (GC) (Pages 5 – 20), and Appendix A - Definition of Categories.

2. Under this GP, projects may qualify for the following:
   - Category 1: Category 1 Self -Verification Notification Form is required (SVNF – see Appendix B).
   - Category 2: Application to and written approval from the Corps is required (Pre-Construction Notification (PCN)). No work may proceed until written approval from the Corps is received.

If your project is ineligible for Category 1, it may qualify for Category 2 or an Individual Permit and you must submit an application (see Page 3). The thresholds for activities eligible for Categories 1 and 2 are defined in Appendix A. This GP does not affect the Corps Individual Permit review process or activities exempt from Corps regulation.

3. Prospective permittees need to read:
   a. Section II to determine if the activity requires Corps authorization.
   b. Sections III and IV to determine if the activity may be eligible for authorization under this GP, specifically whether it is eligible for Self-Verification (SV) or whether Pre-Construction Notification (PCN) is required.

4. Permittees must ensure compliance with all applicable General Conditions in Section IV. The Corps will consider unauthorized any activity requiring Corps authorization if that activity is under construction or completed and does not comply with all of the terms and conditions.

5. Project proponents are encouraged to contact the Corps with questions at any time. Pre-application meetings (see 33 CFR 325.1(b)), whether arranged by the Corps or requested by permit applicants, are encouraged to facilitate the review of projects. Pre-application meetings and/or site visits can help streamline the permit process by alerting the applicant to potentially time-consuming concerns that are likely to arise during the evaluation of their project (e.g., avoidance, minimization and compensatory mitigation requirements, historic properties, endangered species, essential fish habitat, and dredging contaminated sediments).

II. CORPS JURISDICTION/ACTIVITIES COVERED

1. Permits are required from the Corps of Engineers for the following work:

a. The construction of any structure in, over or under any navigable water of the United States (U.S.)[1], the excavating or dredging from or depositing of material in such waters, or the accomplishment of any other work affecting the course, location, condition, or capacity of such waters. The Corps regulates these activities under Section 10 of the Rivers and Harbors Act of 1899. See 33 CFR 322;

b. The discharge of dredged or fill material and certain discharges associated with excavation into waters of the U.S. (e.g. sidecasting). The Corps regulates these activities under Section 404 of the Clean Water Act (CWA). See 33 CFR 323; and

c. The transportation of dredged material for the purpose of disposal in the ocean. The Corps regulates these activities under Section 103 of the Marine Protection, Research and Sanctuaries Act. See 33 CFR 324.

2. Related laws:
33 CFR 320.3 includes a list of related laws, including: Section 401 of the CWA, Section 402 of the CWA, Section 307(c) of the Coastal Zone Management (CZM) Act of 1972, The National Historic Preservation Act of 1966, the Endangered Species Act, the Fish and Wildlife Act of 1956, the Marine Mammal Protection Act of 1972, Magnuson-Stevens Act, and Section 7(a) of the Wild and Scenic Rivers Act.

3. An activity listed below may be authorized by this GP only if that activity and the permittee satisfy all of the GP's terms and conditions. Any activity not specifically listed below may still be eligible for the GP; applicants are advised to contact the Corps for a specific eligibility determination. Category 1 and Category 2 eligibility criteria for each activity in both Inland and Tidal waters can be found in Appendix A.

1. Repair, Replacement, Expansion, and Maintenance of Authorized Structures and Fills
2. Moorings
3. Structures, Floats and Lifts
4. Aids to Navigation, and Temporary Recreational Structures
5. Dredging, Disposal of Dredged Material, Beach Nourishment, and Rock Removal and Relocation
6. Discharges of Dredged or Fill Material Incidental to the Construction of Bridges
7. Bank and Shoreline Stabilization
8. Residential, Commercial, Industrial, and Institutional Developments, and Recreational Facilities
9. Utility Line Activities
10. Linear Transportation Projects
11. Mining Activities
12. Boat Ramps and Marine Railways
13. Land and Water-Based Renewable Energy Generation Facilities and Hydropower Projects
14. Reshaping Existing Drainage Ditches and Mosquito Management
15. Oil Spill and Hazardous Material Cleanup
16. Cleanup of Hazardous and Toxic Waste
17. Scientific Measurement Devices
18. Survey Activities
19. Agricultural Activities
20. Fish and Wildlife Harvesting, Enhancement, and Attraction Devices
21. Habitat Restoration, Establishment and Enhancement Activities
22. Previously Authorized Activities
23. Stream & Wetland Crossings
24. Aquaculture

Note: Multiple activities may be authorized in the same GP, e.g. a recreational pier (#3) with an associated mooring (#2) or a windpower facility (#13) with an associated transmission line (#9).

[1] Defined in Appendix F, Definitions and at 33 CFR 328.

III. PROCEDURES

1. State Approvals. Applicants are responsible for applying for and obtaining any of the required state or local approvals. Federal and state jurisdictions may differ in some instances. State permits may be required for specific projects regardless of the general permit category.

In order for authorizations under this GP to be valid, when any of the following state approvals or statutorily-required reviews is also required, the approvals must be obtained prior to the commencement of work in Corps jurisdiction.

- Maine Department of Environmental Protection (DEP): Natural Resources Protection Act (NRPA) permit, including permit-by-rule (PBR) and general permit authorizations; Site Location of Development Act permit; Maine Waterway Development and Conservation Act permit; and Maine Hazardous Waste, Septage, and Solid Waste Management Act license.
- Maine Department of Conservation, Agriculture & Forestry: Land Use Planning Commission (LUPC) permit.
- Maine Department of Marine Resources: Aquaculture Leases.
- Maine Department of Conservation, Bureau of Parks and Lands, Submerged Lands: Submerged Lands Lease.

NOTE: This GP may also be used to authorize projects that are not regulated by the State of Maine (e.g., certain seasonal floats or moorings).

2. How to Obtain/Apply for Authorization.

a. Category 1 (Self-Verification): Self-Verification Notification Form (SVNF) required. The SVNF is required for all SV eligible work in Maine unless otherwise stated in Appendix A. Activities that are eligible for SV are authorized under this GP and may commence without written verification from the Corps provided the prospective permittee has:

i. Confirmed that the activity will meet the terms and conditions of Category 1. Consultation with the Corps and/or other relevant federal and state agencies may be necessary to ensure compliance with the applicable general conditions (GCs) and related federal laws such as the National Historic Preservation Act (see GC 6), the Endangered Species Act (GC 8) and the Wild and Scenic Rivers Act (GC 9). Prospective permittees are encouraged to contact the Corps with SV eligibility questions. Activities not meeting the SV criteria must submit a PCN to the Corps.

ii. Submitted the SVNF (see GC 27 and Appendix B) to the Corps. **NOTE: A copy of a state permit application form may be an acceptable surrogate for the SVNF. Whichever form chosen needs to include a location map, plans, and an Official Species List for federally listed threatened or endangered species (Reference Appendix D).**

b. Category 2 (Pre-Construction Notification (PCN)): Application to and written verification from the Corps is required before work can proceed. For activities that do not qualify for SV or where otherwise required by the terms of the GP, the permittee must submit a PCN and obtain a written permit before starting work in Corps jurisdiction.

i. The Corps will coordinate review of all activities requiring PCN with federal and state agencies and federally recognized tribes, as appropriate. To be eligible and subsequently authorized, an activity must result in no more than minimal individual and cumulative effects on the aquatic environment as determined by the Corps in accordance with the criteria listed within this GP. This may require project modifications involving avoidance, minimization, or compensatory mitigation for unavoidable impacts to ensure that the net adverse effects of a project are no more than minimal.

ii. The Corps will attempt to issue a written eligibility determination within the state's review period. Regardless, work eligible for Category 2 may not proceed before Corps written approval is received.

c. All applicants for Category 2 projects must:

i. Apply directly to the Corps using the state application form or the Corps application form (ENG Form 4345[2]), and apply directly to the state (DEP, LUPC, BPL or DMR) as applicable using the appropriate state form, if the work is regulated by the Corps and the state; or

ii. Apply directly to the Corps using the Corps application form (ENG Form 4345[2]) if the work is regulated by the Corps but not the state (DEP, LUPC, BPL or DMR).

iii. Provide application information (see "Information Typically Required" in Appendix C) to help ensure the application is complete and to speed project review.

iv. Obtain an Official Species List of federally threatened or endangered species in the project area (GC 8).

v. Submit a copy of their application materials to the Maine Historic Preservation Commission (MHPC) *and* all five Indian tribes listed at Appendix E, at the same time, or before, they apply to the Corps, to be reviewed for the presence of historic, archaeological or tribal resources in the permit area that the proposed work may affect. Submittals to the Corps shall include information to indicate that this has been done (a copy of the applicant's cover letter to MHPC and tribes or a copy of the MHPC and tribal response letters is acceptable).

d. Work that is not regulated by the State of Maine, but is subject to Corps jurisdiction, may still be eligible for authorization under this GP.

e. **Emergency Situations:** 33 CFR 325.2(e)4 states that an "emergency" is a situation which would result in an unacceptable hazard to life, a significant loss of property, or an immediate, unforeseen, and significant economic hardship if corrective action requiring a permit is not undertaken within a time period less than the normal time needed to process the application under standard procedures." Emergency work is subject to the same terms and conditions of this GP as non-emergency work, and similarly, must qualify for authorization under the GP; otherwise an IP is required. The Corps will work with all applicable agencies to expedite verification according to established procedures in emergency situations.

3. Individual Permits. Projects that are not authorized by this GP require an Individual Permit (IP) (33 CFR 325.5) and proponents must submit an application directly to the Corps. This GP does not affect the Corps IP review process or activities exempt from Corps regulation. For general information and application form, see the Corps website or contact the Corps (see Appendix E). The Corps encourages applicants to apply concurrently for a Corps IP and applicable state permits.

The Corps retains discretionary authority on a case-by-case basis to elevate a GP eligible project to an IP based on concerns for the aquatic environment or for any other factor of the public interest [33 CFR 320.4(a)]. Whenever the Corps notifies an applicant that an IP is required, no work in Corps jurisdiction may be conducted until the Corps issues the required authorization in writing indicating that work may proceed.

4. Enforcement/Non-Compliance. Work performed without the required Corps of Engineers permits is subject to administrative, civil, and criminal penalties. The Corps will evaluate unauthorized activities for enforcement action under 33 CFR 326.

The Corps will consider unauthorized any activity requiring Corps authorization if that activity is under construction or completed and does not comply with all of the terms and conditions of a GP or an IP. The Corps may elect to suspend enforcement proceedings if the permittee modifies his project to comply with a GP.

After considering whether a violation was knowing or intentional, and other indications of the need for a penalty, the Corps can elect to terminate an enforcement proceeding with an after-the- fact authorization under a GP, if all terms and conditions of the GP have been satisfied, either before or after the activity has been accomplished.

[2] Located at www.nae.usace.army.mil/missions/regulatory under "Forms & Publications."

IV. GENERAL CONDITIONS

To qualify for GP authorization, the prospective permittee must comply with the following general conditions, as applicable.

1. Other Permits
2. Federal Jurisdictional Boundaries
3. Minimal Direct, Secondary, and Cumulative Impacts
4. Mitigation (Avoidance, Minimization, and Compensatory Mitigation)
5. Single and Complete Projects
6. Historic Properties
7. Corps Projects and Property
8. Federal Threatened and Endangered Species
9. Wild and Scenic Rivers
10. Navigation
11. Federal Liability
12. Utility Line Installation and Removal
13. Heavy Equipment in Wetlands or Mudflats
14. Temporary Fill
15. Restoration of Special Aquatic Sites (including wetland areas).
16. Soil Erosion, Sediment and Turbidity Controls
17. Time of Year Windows/Restrictions.
18. Aquatic Life Movements & Management of Water Flows
19. Water Quality and Coastal Zone Management
20. Floodplains and Floodways
21. Storage of Seasonal Structures
22. Spawning, Breeding, and Migratory Areas
23. Vernal Pools
24. Invasive and Other Unacceptable Species
25. Programmatic Agreements
26. Permit On-Site
27. Self-Verification Notification Form (SVNF)
28. Inspections
29. Maintenance
30. Property Rights
31. Transfer of GP Verifications
32. Modification, Suspension, and Revocation
33. Special Conditions
34. False or Incomplete Information
35. Abandonment
36. Enforcement Cases
37. Duration of Authorization
38. Previously Authorized Activities
39. Discretionary Authority
40. St. John/St. Croix Rivers.
41. National Lands
42. Essential Fish Habitat (EFH)
43. Work Site Restoration
44. Bank Stabilization
45. Stream Work & Crossings and Wetland Crossings

1. Other Permits. Permittees must obtain other federal, state, or local authorizations required by law. Applicants are responsible for applying for and obtaining all required state or local approvals. This includes, but is not limited to, the project proponent obtaining a Flood Hazard Development Permit issued by the town, if necessary. Inquiries may be directed to the municipality or to the Maine Floodplain Management Coordinator at (207) 287-8063. See http://www.maine.gov/dacf/flood/

2. Federal Jurisdictional Boundaries

a. Applicability of this GP shall be evaluated with reference to federal jurisdictional boundaries. Applicants are responsible for ensuring that the boundaries used satisfy the federal criteria defined at 33 CFR 328 "Waters of the U.S." and 33 CFR 329 "Navigable Waters of the U.S."

NOTE: Waters of the U.S. include the subcategories "navigable waters of the U.S." and "wetlands."

b. For Category 1 projects, proponents are not required to delineate the waters of the U.S. that they plan to impact, but must approximate the square footage of impacts in order to determine the review category (1 or 2 or Individual Permit). For projects filling <15,000 square feet (SF) of waters of the U.S. that do not qualify for Category 1 (e.g., vernal pool, secondary or endangered species impacts, etc.) and therefore require an application to the Corps (PCN), and for those filling ≥15,000 SF, applicants shall delineate all waters of the U.S. that will be filled (direct impacts) in accordance with the Corps of Engineers Wetlands Delineation Manual and the most recent regional supplement (see Appendix C). In addition, applicants shall approximately identify all waters of the U.S. on the property and *known* waters adjacent to the property in order for the Corps to evaluate secondary impacts. The waters of the U.S. shall be clearly shown on the project plans submitted with the application. This includes all waters of the U.S. in areas under DEP or LUPC jurisdiction regardless of whether they're shown on LUPC zoning maps.

c. On a case-by-case basis, the Corps may modify/refine the above delineation and identification requirements for waters of the U.S. See www.nae.usace.army.mil/missions/regulatory >> Jurisdictional Limits and Wetlands for more information on delineating jurisdictional areas.

3. Minimal Direct, Secondary, and Cumulative Effects[3]

a. Projects authorized by this GP shall have no more than minimal direct, secondary and cumulative adverse environmental impacts. Category 2 applicants should provide information on secondary and cumulative impacts as stated in Appendix C. Compensatory mitigation may be required to offset unavoidable impacts (see GC 4) and to ensure that they are no more than minimal. Compensatory mitigation requirements will be determined on a case-by-case basis.

b. Secondary impacts to waterway and/or wetland areas, (e.g., areas drained, flooded, cleared, excavated or fragmented) shall be added to the total fill area when determining whether the project qualifies for Category 1 or 2. Direct, secondary and cumulative impacts are defined at Appendix A, Endnote 2 and Appendix F.

c. Site clearing, grading and construction activities in the upland habitat surrounding vernal pools ("Vernal Pool Management Areas") are secondary impacts. See GC 23 for avoidance and minimization requirements and recommendations.

d. Bank stabilization activities in tidal waters are provided at Appendix A, Page 30. Direct impacts in tidal waters from contiguous bank stabilization projects in excess of 200 linear feet (Applicant or Applicant + Abutters combined) must undergo Category 2 review.

4. Mitigation (Avoidance, Minimization, and Compensatory Mitigation)

a. Discharges of dredged or fill material into waters of the U.S., including wetlands, shall be avoided and minimized to the maximum extent practicable through consideration of alternatives. The Corps may require compensatory mitigation of unavoidable direct and secondary impacts associated with Category 2 projects on a case-by-case basis.

b. Applicants proposing work in jurisdictional waters should consider riparian/forested buffers for stormwater management and low impact development (LID) best management practices (BMPs) to reduce

[3] Direct, secondary and cumulative effects are defined at Appendix F, Definitions and Acronyms.

impervious cover and manage stormwater to minimize secondary impacts to aquatic resources to the maximum extent practicable.[4]

c. Compensatory mitigation[5] for effects to waters of the U.S., including direct, secondary and temporal[6], may be required for permanent impacts that exceed the SV area limits, and may be required for temporary impacts that exceed the SV area limits, to offset unavoidable impacts which remain after all appropriate and practicable avoidance and minimization has been achieved and to ensure that the adverse effects to the aquatic environment are no more than minimal. Proactive restoration projects or temporary impact work with no lasting secondary effects may generally be excluded from this requirement. Refer to Appendix G.

5. Single and Complete Projects[7]

a. This GP shall not be used to piecemeal work and shall be applied to single and complete projects. When determining the review category in Appendix A (Category 1 or 2) for a single and complete project, proponents must include any permanent historic fill placed since October 1995 that is associated with that project and all currently proposed temporary and permanent impact areas.

b. A single and complete project must have independent utility[7].

c. Unless the Corps determines the activity has independent utility:

i. This GP shall not be used for any activity that is part of an overall project for which an Individual Permit is required.

ii. All components of a single project and/or all planned phases of a multi-phased project (e.g., subdivisions should include all work such as roads, utilities, and lot development) shall be treated together as constituting one single and complete project.

d. For linear projects, such as power lines or pipelines with multiple crossings, the single and complete project is all crossings of a single water of the U.S. (i.e., single waterbody) at a specific location. For linear projects crossing a single waterbody several times at separate and distant locations, each crossing is considered a single and complete project. However, individual channels in a braided stream or river, or individual arms of a large, irregularly-shaped wetland or lake, etc., are not separate waterbodies and crossings of such features cannot be considered separately. If any crossing requires a Category 2 activity, then the entire linear project shall be reviewed as one project under Category 2.

6. Historic Properties

a. No undertaking shall cause effects (defined at 33 CFR 325 Appendix C and 36 CFR 800) on properties listed on, determined to be eligible for listing on, or potentially eligible for listing on the National Register of Historic Places[8], including previously unknown historic properties within the permit area, unless the Corps or another Federal action agency has satisfied the consultation requirements of Section 106 of the National Historic Preservation Act (NHPA). The State Historic Preservation Officer (SHPO), Tribal Historic Preservation Officer (THPO) and the National Register of Historic Places can assist with locating information on: i) previously identified historic properties; and ii) areas with potential for the presence of historic resources, which may require identification and evaluation by qualified historic preservation and/or archaeological consultants in consultation with the Corps and the SHPO and/or THPO(s).

---

[4] See: www.nae.usace.army.mil/missions/regulatory >> State General Permit >> Permit Resources >> Mitigation for this additional information: a) "Wetland BMP Manual - Techniques for Avoidance & Minimization," b) riparian/forested buffer BMPs, and c) LID BMPs. LID BMPs include, but are not limited to: replacing curbs and gutters with swales; using an open space design for subdivisions; using permeable, pervious or porous pavements; constructing bio-retention systems; and/or, adding a green roof or rain garden.

[5] Compensatory mitigation projects provided to offset losses of aquatic resources must comply with the applicable provisions of 33 CFR 332. See also the New England District Compensatory Mitigation Guidance at www.nae.usace.army.mil/regulatory >> Mitigation.

[6] Temporal loss: The time lag between the loss of aquatic resource functions caused by the permitted impacts and the replacement of aquatic resource functions at the compensatory mitigation site(s) (33 CFR 332.2).

[7] Single and Complete Project and Independent Utility are defined in Appendix F - Definitions.

[8] The majority of historic properties are not listed on the National Register of Historic Places and may require identification and evaluation by qualified historic preservation and/or archaeological consultants in consultation with the Corps and the SHPO and/or THPO(s).

b. For activities eligible for SV, proponents must ensure and document that the activity will not cause effects as stated in 6(a). Proponents must submit a PCN if the authorized activity may cause effects as stated in 6(a) as soon as possible to ensure that the Corps is aware of any potential effects of the permitted activity on any historic property to ensure all Section 106 requirements are met.

c. All PCNs shall: i) show notification to the SHPO and applicable THPO(s)[9] for their identification of historic properties, ii) state which historic properties may be affected by the proposed work or include a vicinity map indicating the location of the historic properties or the potential for the presence of historic properties, and iii) include any available documentation from the SHPO or THPO(s) indicating that there are or are not historic properties affected. Starting consultation early in project planning can save proponents time and money.

d. If you discover any previously unknown historic, cultural or archeological remains and artifacts while accomplishing the activity authorized by this permit, you must immediately notify the district engineer of what you have found, and to the maximum extent practicable, avoid construction activities that may affect the remains and artifacts until the required coordination has been completed. The district engineer will initiate the Federal, Tribal and state coordination required to determine if the items or remains warrant a recovery effort or if the site is eligible for listing in the National Register of Historic Places.

7. Corps Projects and Property

a. In addition to any authorization under this GP, proponents must contact the Corps Real Estate Division at (978) 318-8585 for work occurring on or potentially affecting Corps properties and/or Corps-controlled easements to initiate reviews and determine what real estate instruments are necessary to perform work. Permittees may not commence work on Corps properties and/or Corps-controlled easements until they have received any required Corps real estate documents evidencing site-specific permission to work.

b. Any proposed temporary or permanent alteration, or modification or use, including occupation, of a federal project (including but not limited to a levee, dike, floodwall, channel, anchorage, breakwater, seawall, bulkhead, jetty, wharf, pier or other work built but not necessarily owned by the United States), which would obstruct or impair the usefulness of the federal project in any manner, and/or would involve changes to the authorized federal project's scope, purpose, and/or functioning that go beyond minor modifications required for normal operations and maintenance, is not eligible for SV and requires review and approval by the Corps pursuant to 33 USC 408. Where Section 408 is applicable, a decision on a Department of the Army general permit application will not be rendered prior to the decision on a Section 408 request.

c. Any structure or work within any Corps Federal Navigation Project (FNP) or its buffer zone[10], shall be subject to removal at the owner's expense prior to any future Corps dredging or the performance of periodic hydrographic surveys. See GC 10 for more requirements related to FNPs.

8. Federal Threatened and Endangered Species

a. No activity is authorized which: i) is likely to directly or indirectly jeopardize the continued existence of a threatened or endangered species or a species proposed for such designation, as identified under the Federal Endangered Species Act (ESA), or which will directly or indirectly destroy or adversely modify the critical habitat of such species; ii) "may affect" a listed species or critical habitat, unless Section 7 consultation addressing the effects of the proposed activity has been completed; or iii) violates the ESA.

b. **All applicants must request an Official Species List from the US Fish & Wildlife Service and must include the list in the Corps permit application. To request an Official Species List, refer to the instructions in Appendix D.**

c. **For federally listed species in tidal waters, applicants should contact the National Marine Fisheries Service at:** http://www.greateratlantic.fisheries.noaa.gov/protected/section7/

[9] Appendix E, 3(a)&(b). Historic Resources, provides contact information and each tribe's "area of concern."
[10] See Appendix H for a list of FNPs. The buffer zone is equal to three times the authorized depth of the FNP.

d. A PCN is required if a threatened or endangered species, a species proposed for listing as threatened or endangered, or designated or proposed critical habitat (all hereinafter referred to as "listed species or habitat"), as identified under the ESA, is present in the action area[11].

e. Federal agencies should follow their own procedures for complying with the requirements of the ESA but should coordinate that consultation with the Corps as well.

9. Wild and Scenic Rivers.[12] Any activity that occurs in the designated main stem of, within 0.25 mile up or downstream of the designated main stem of, or in tributaries within .25 miles of the designated main stem of a National Wild and Scenic River, or in "bordering and contiguous wetlands" (see Appendix A, Endnote 1) that are adjacent to the designated main stem of a National Wild and Scenic River, or that has the potential to alter flows within a river within the National Wild and Scenic River System, is not eligible for Category 1 regardless of size of the impacts. This condition applies to both designated Wild and Scenic Rivers and rivers officially designated by Congress as study rivers for possible inclusion while such rivers are in an official study status. National Wild and Scenic Rivers System segments for Maine as of October 2015 include: Allagash River beginning at Telos Dam continuing to Allagash checkpoint at Eliza Hole Rapids, approximately 3 miles upstream of the confluence with the St. John River (length = 92 miles); and 11.25 miles of the York River, in the State of Maine, from its headwaters at York Pond to the mouth of the river at York Harbor, plus its tributaries (currently under study).

10. Navigation

a. Any structure or work that extends closer to the horizontal limits of any Corps Federal Navigation Project (see Appendix H) than a distance of three times the project's authorized depth shall be subject to removal at the owner's expense prior to any future Corps dredging or the performance of periodic hydrographic surveys. This is applicable to Category 1 and 2. Reference Appendix A, Page 28 (Moorings) and Page 29 (Structures, Floats & Lifts).

b. There shall be no unreasonable interference with navigation by the existence or use of the activity authorized herein, and no attempt shall be made by the permittee to prevent the full and free use by the public of all navigable waters at or adjacent to the activity authorized herein.

c. The permittee understands and agrees that if future U.S. operations require the removal, relocation, or other alteration of the structure or work herein authorized, or if, in the opinion of the Secretary of the Army or his authorized representative, said structure or work shall cause unreasonable obstruction to the free navigation of the navigable waters, the permittee will be required, upon due notice from the Corps, to remove, relocate, or alter the structural work or obstructions caused thereby, without expense to the U.S. No claim shall be made against the U.S. on account of any such removal or alteration.

d. A PCN is required for all work in, over or under an FNP or its buffer zone unless otherwise indicated in Appendix A. (Reference Appendix A, Endnote 13, Page 36)

11. Federal Liability. In issuing this permit, the Federal Government does not assume any liability for the following: (a) damages to the permitted project or uses thereof as a result of other permitted or unpermitted activities or from natural causes; (b) damages to the permitted project or uses thereof as a result of current or future activities undertaken by or on behalf of the U.S. in the public interest;
(c) damages to persons, property, or to other permitted or unpermitted activities or structures caused by the activity authorized by this permit; (d) design or construction deficiencies associated with the permitted work; (e) damage claims associated with any future modification, suspension, or revocation of this permit.

12. Utility Line Installation and Removal

a. Subsurface utility lines shall remain subsurface. If it is necessary to discharge dredged or filled material not previously authorized in order to keep such utility lines buried or restore them to their original subsurface condition, a PCN and written verification from the Corps may be required (e.g., in the case of side

---

[11] The "Endangered Species Consultation Handbook – Procedures for Conducting Consultation and Conference Activities Under Section 7 of the ESA," defines action area as "all areas to be affected directly or indirectly by the Federal action and not merely the immediate area involved in the action. [50 CFR 402.02]."

[12] Additional information can be found at: http://www.rivers.gov.

casting into wetlands from utility trenches). Certain repair, replacement or maintenance activities may be eligible for Category 1 – refer to Appendix A.

b. Subsurface utility lines must be installed at a sufficient depth to avoid damage from anchors, dredging, etc., and to prevent exposure from erosion and stream adjustment. In accordance with Corps New England District Regulation NEDER 1110-1-9 (www.nae.usace.army.mil/missions/regulatory >> Useful Links and Documents), as an absolute minimum, the bottom cover associated with the initial installation of utility lines under navigable waters and navigation channels shall be 48 inches in soil or 24 inches in rock excavation in competent rock unless specified in a written determination. These minimum bottom cover requirements for pipelines and cables shall be measured from the maximum depth of dredging to the top of the utility. The maximum depth of dredging, in waterways having existing FNPs, is generally considered to be the authorized project depth plus any allowance for advanced maintenance and the allowable overdepth for dredging tolerances. In waterways that do not have existing FNPs, this depth should be taken as two feet below the existing bottom or maximum depth of proposed dredging, as applicable.

c. Aerial utility lines that cross navigable waters must meet minimum clearances. See 33CFR322.5(i).

d. For horizontal directional drilling work, returns of drilling fluids to the surface (i.e., frac-outs) are not authorized and require restoration to the maximum extent practicable in accordance with the terms and conditions of this GP. The permittee and its contractor shall have onsite and shall implement the procedures detailed in a frac-out contingency plan for monitoring drilling operations and for the immediate containment, control and recovery/removal of drilling fluids released into the environment should a discharge of material occur during drilling operations.

e. Within the context of any new installations, any abandoned or inactive utility lines should be removed and faulty lines (e.g., leaking hazardous substances, petroleum products, etc.) should be removed or repaired to the extent practicable. A PCN and written verification from the Corps is required if they are to remain in place, e.g., to protect sensitive areas or ensure safety.

f. No work shall drain a water of the U.S. by providing a conduit for water on or below the surface. Trench plugs installed along pipelines may be effective.

13. Heavy Equipment in Wetlands or Mudflats. Operating heavy equipment other than fixed equipment (drill rigs, fixed cranes, etc.) within wetlands shall be minimized, and such equipment shall not be stored, maintained or repaired in wetlands, to the maximum extent practicable. Where construction requires heavy equipment operation in wetlands, the equipment shall either have low ground pressure (typically <3 psi), or it shall be placed on swamp/construction/timber mats (herein referred to as "construction mats" and defined at Appendix A, Endnote 4) that are adequate to support the equipment in such a way as to minimize disturbance of wetland soil and vegetation. Construction mats are to be placed in the wetland from the upland or from equipment positioned on swamp mats if working within a wetland. Dragging construction mats into position is prohibited. Other support structures that are capable of safely supporting equipment may be used with written Corps authorization (Category 2 authorization or Individual Permit). Similarly, the permittee may request written authorization from the Corps to waive use of mats during frozen, dry or other conditions. An adequate supply of spill containment equipment shall be maintained on site. Construction mats should be managed in accordance with the Construction Mat BMPs at www.nae.usace.army.mil/missions/regulatory >> State General Permits >> Permit Resources.

14. Temporary Fill. Temporary fill that qualifies for Category 1 (e.g., <15,000 SF of combined temporary and permanent fill associated with the single and complete project) or is authorized in writing under Category 2, shall adhere to the following:

a. All temporary fill and disturbed soils shall be stabilized to prevent its eroding into waters of the U.S. where it is not authorized. Work shall include phased or staged development to ensure only areas under active development are exposed and to allow for stabilization practices as soon as practicable, typically within three calendar days after disturbance. Accelerated stabilization (the providing of temporary or permanent cover by the end of the work day to prevent erosion) shall be employed as necessary. Temporary fill must be placed in a manner that will prevent it from being eroded by expected high flows.

b. Unconfined temporary fill authorized for discharge into waters of the U.S. (e.g., temporary stream crossings) shall consist of material that minimizes impacts to water quality (e.g. washed stone, stone, etc.).

c. Appropriate measures must be taken to maintain normal downstream flows and minimize flooding to the maximum extent practicable when temporary structures, work, and discharges of dredged or fill material, including cofferdams, are necessary for construction activities, access fills, or dewatering of construction sites. Place materials in a location and manner that does not adversely impact surface or subsurface water flow into or out of the wetland. Temporary fill authorized for discharge into wetlands shall be placed on geotextile fabric or other appropriate material laid on the pre-construction wetland grade where practicable to minimize impacts and to facilitate restoration to the original grade. Construction mats are excluded from this requirement.

d. Temporary fill, construction mats and corduroy roads shall be entirely removed as soon as they are no longer needed to construct the authorized work. Temporary fill shall be placed in its original location or disposed of at an upland site and suitably contained to prevent its subsequent erosion into waters of the U.S. To qualify for Category 1, temporary fill placed during the: i.) growing season must be removed before the beginning of the next growing season; and ii.) non-growing season may remain throughout the following growing season, but must be removed before the beginning of the next growing season.

e. Temporary fill, construction mats and corduroy roads are considered temporary only if they are removed as soon as they are no longer needed to construct the authorized work.

f. Construction debris and/or deteriorated materials shall not be located in waters of the U.S.

15. Restoration of Special Aquatic Sites (Including Wetland Areas)

a. Temporary fills must be removed in their entirety and the affected areas restored to their pre-construction condition, function and elevation. Restoration shall typically commence no later than the completion of construction.

b. For excavated areas, "restored to pre-construction condition, function and elevation" means careful removal of existing soil and vegetation, separate topsoil and subsoil stockpiling, soil protection, and replacement back to the original location such that the original soil layering and vegetation schemes are approximately the same, unless otherwise authorized. Plan for natural settling that will occur (the initial post-restoration elevation of the backfilled areas should be above the desired final grade as topsoil may settle by 33% to 50%), minimize compaction, and ensure that topsoil is void of gravel and subsoil. A minimum of 4 inches of topsoil should be at the surface after the soil has settled. Wetland areas temporarily disturbed shall be stabilized (e.g., seeded or planted). Seed mixes and vegetation shall include only plant species native to New England and shall not include any species listed as "Invasive and Other Unacceptable Plant Species" in the "New England District Compensatory Mitigation Guidance" (see GC 24 and refer to Appendix G). This list may be updated periodically.

c. Limit compaction to the minimum needed to promote a successful seedbed; avoid a 'fluffy' seedbed, which is susceptible to erosion until the plants get established, and a compacted topsoil layer, which is counter-productive and will lead to greater erosion susceptibility down the road. Test soils for compaction. A soil probe, auger, or shovel should be able to retrieve samples of post-restoration profile. Equipment refusal shall be considered a failure of restoration, in which case the soil should be restored through deep-ripping and/or de-compaction, or other appropriate methods, and wetland hydrology must be maintained. See the BMPs at www.nae.usace.army.mil/missions/regulatory >> State General Permits >> Permit Resources >> Restoration.

d. In areas of authorized temporary disturbance, cut woody vegetation (trees, shrubs, etc.) shall be cut at or above ground level and not uprooted in order to prevent disruption to the wetland soil structure and to allow stump sprouts to revegetate the work area, unless otherwise authorized.

e. Trenches shall be constructed or backfilled so that the trench does not drain waters of the U.S. (e.g., materials or methods that create a French drain effect).

16. Soil Erosion, Sediment and Turbidity Controls

a. Adequate sedimentation and erosion control management measures, practices and devices, such as phased construction, installation of sediment control barriers (i.e. silt fence, vegetated filter strips, geotextile silt fences, erosion control mixes, hay bales or other devices) downhill of all exposed areas, retention of existing vegetated buffers, application of temporary mulching during construction, and permanent seeding and stabilization shall be installed and properly maintained to reduce erosion and retain sediment on-site during and after construction. They shall be capable of preventing erosion; of collecting sediment, suspended and floating materials; and of filtering fine sediment.

b. Temporary sediment control barriers shall be removed upon completion of work, but not until all disturbed areas are permanently stabilized. The sediment collected by these sediment barriers shall be removed and placed at an upland location and stabilized to prevent its later erosion into a waterway or wetland.

c. All exposed soil and other fills shall be permanently stabilized at the earliest practicable date .

17. Time of Year Work Windows/Restrictions. For activities where work is authorized in streams and tidal waters that causes turbidity or sediment re-suspension or other construction related disturbances, work must be conducted during the following TOY work windows (not during the TOY restrictions) unless otherwise authorized by the Corps under Category 2 review:

	TOY Restriction (no work)	TOY Work Window (work allowed)
Non-tidal waters	Oct. 01 through Jul. 14	Jul. 15 through Sep. 30
Tidal waters	Apr. 10 through Nov. 07	Nov. 08 through Apr. 09

Alternate windows authorized under Category 2 may include species specific windows recommended by the Maine Dept. of Marine Resources and/or Maine Dept. of Inland Fisheries & Wildlife.

18. Aquatic Life Movements & Management of Water Flows

a. No activity may substantially disrupt the necessary life cycle movements of those species of aquatic life indigenous to the waterbody, including those species that normally migrate through the area, unless the activity's primary purpose is to impound water. Unless otherwise stated, activities impounding water in a stream require a PCN to ensure impacts to aquatic life species are avoided and minimized. All permanent and temporary crossings of waterbodies (e.g., streams, wetlands) shall be:

i. Suitably culverted, bridged, or otherwise designed and constructed to maintain low flows to sustain the movement of those aquatic species; and

ii. Properly aligned and constructed to prevent bank erosion or streambed scour both adjacent to and inside the culvert. Permanent and temporary crossings of wetlands shall be suitably culverted, spanned or bridged in such a manner as to preserve hydraulic and ecological connectivity between the wetlands on either side of the road.

b. To avoid adverse impacts on aquatic organisms, the low flow channel/thalweg shall remain unobstructed during periods of low flow, except when it is necessary to perform the authorized work.

c. To the maximum extent practicable, the pre-construction course, condition, capacity, and location of open waters must be maintained for each activity, including stream channelization and storm water management activities. The activity must be constructed to withstand expected high flows. The activity must not restrict or impede the passage of normal or high flows, unless the primary purpose of the activity is to impound water or manage high flows. The activity may alter the preconstruction course, condition, capacity, and location of open waters if it benefits the aquatic environment (e.g., stream restoration or relocation activities).

19. Water Quality and Coastal Zone Management

a. Applicants must satisfy any conditions imposed by the state and EPA, where applicable, in their CWA § 401 Water Quality Certifications (WQC) for this GP, or in any Individual § 401 WQC. See Appendix E for state-specific contact information and to determine if any action is required to obtain a 401 WQC. The Corps may require additional water quality management measures to ensure that the authorized activity does not cause or contribute to a violation of water quality standards. All projects authorized by this GP shall be designed, constructed and operated to minimize or eliminate the discharge of pollutants.

b. Applicants must satisfy any additional conditions imposed by the state in their Coastal Zone Management (CZM) Act consistency concurrences for this GP, or in any Individual CZM consistency concurrences. The Corps may require additional measures to ensure that the authorized activity is consistent with state coastal zone management requirements.

20. Floodplains and Floodways

a. Appropriate measures must be taken to minimize flooding to the maximum extent practicable.

b. Activities within 100-Year Floodplains must comply with applicable Federal Emergency Management Agency (FEMA)-approved state and/or local floodplain management permitting requirements. Proponents may need to coordinate with FEMA and apply for a formal change to the flood insurance study products or forward a set of project plans and relevant technical documentation in a digital format to the Risk

Analysis Branch Chief, Mitigation Division, FEMA, Region 1, 99 High Street, Boston, Massachusetts 02110. Applicants should provide a copy of any documentation to the Corps along with the PCN.

c. Proponents may have to obtain a Flood Hazard Development Permit issued by the town. Inquiries may be directed to the municipality or to the Maine Floodplain Management Coordinator at (207) 287-8063. See http://www.maine.gov/dacf/flood/

21. Storage of Seasonal Structures. Seasonal or recreational structures such as pier sections, floats, aquaculture structures, etc. that are removed from the waterway for a portion of the year (often referred to as seasonal structures) shall be stored in an upland location landward of mean high water (MHW) or ordinary high water (OHW) and not in wetlands, tidal wetlands, their substrate or on mudflats. These seasonal structures may be stored on the fixed, pile-supported portion of the structure that is waterward of MHW or OHW. Seasonal storage of structures in navigable waters, e.g., in a protected cove on a mooring, requires Corps approval and local harbormaster approval.

22. Spawning, Breeding, and Migratory Areas

a. Jurisdictional activities and impacts such as excavations, discharges of dredged or fill material, and/or suspended sediment producing activities in jurisdictional waters that provide value as fish migratory areas, fish and shellfish spawning or nursery areas, or amphibian and migratory bird breeding areas, during spawning or breeding seasons shall be avoided and minimized to the maximum extent practicable.

b. Jurisdictional activities in waters of the United States that provide value as breeding areas for migratory birds must be avoided to the maximum extent practicable. The permittee is responsible for obtaining any "take" permits required under the USFWS's regulations governing compliance with the Migratory Bird Treaty Act or the Bald and Golden Eagle Protection Act. The permittee should contact the appropriate local office of the USFWS to determine if such "take" permits are required for a particular activity (See Appendix E).

23. Vernal Pools

a. Only vernal pools that meet the current definition of waters of the U.S. are regulated by the Corps.

b. Direct and indirect adverse effects to all vernal pools (VPs), including their envelopes and critical terrestrial habitats (VP Management Areas[13]), shall be avoided and minimized to the maximum extent practicable. Site clearing, grading, and construction activities associated with a regulated activity in the VP Management Area may cause these adverse effects to the VP.

c. The State of Maine has specific protections for vernal pools.[14]

d. When any regulated activities occur within 750 feet of a vernal pool, the following management practices must be followed for all work within any VP Management Area (750' of a VP's edge) *in order to qualify for Category 1*:

i. No disturbance within the VP Depression or VP Envelope (area within 100 feet of the VP Depression's edge)[15];

ii. Maintain a minimum of 75% of the Critical Terrestrial Habitat (area within 100-750 feet of the VP Depression's edge) as unfragmented forest with at least a partly-closed canopy of overstory trees to provide shade, deep litter and woody debris;

iii. Maintain or restore forest corridors connecting wetlands and significant vernal pools;

iv. Minimize forest floor disturbance; and

v. Maintain native understory vegetation and downed woody debris.

---

[13] The Corps VP Management Area, which includes the VP and a 750' radius from the VP's edge, is defined at Appendix A, Endnote 5.

[14] Appendix G, 10(a)-(d) provides links to the state's Significant Wildlife Habitat regulations and references that provide impact minimization measures to reference when designing projects.

[15] The no disturbance requirement in the VP envelope [see (b)(i)(1)], and (b)(i)(2), do not apply to temporary impacts associated with construction mats in previously disturbed areas of existing utility project (e.g., transmission lines, gas pipelines) or linear transportation project (e.g., roads, highways, railways, trails, airport runways and taxiways) right-of-ways provided there is a Vegetation Management Plan that avoids, minimizes and mitigates impacts to aquatic resources.

vi. Cape Cod style-curbing or no curbing options shall be used on new roads to facilitate amphibian passage. (Reference Appendix G)

e. A PCN is required for any regulated activity within 750' of a vernal pool when all work within the VP Management Area does not comply with the Category 1 requirements in (d) above. Information on directional buffers in accordance with the VP Directional Buffer Guidance document may be provided in order to demonstrate minimal impact and avoid compensation requirements (Reference Appendix G). Conservation of the un-impacted area within the VP Management Area will often be required.

f. GC 2 requires applicants to delineate or approximately identify on the project plans all waters of the U.S., which contain vernal pools.

g. GC 23(b-d) do not apply to projects that are within a municipality and meet the provisions of a Corps-approved VP Special Area Management Plan (VP SAMP) and are otherwise eligible for self-verification.

24. Invasive and Other Unacceptable Species[16]

a. The introduction or spread of invasive or other unacceptable plant or animal species on the project site or areas adjacent to the project site caused by the site work shall be avoided to the maximum extent practicable. For example, construction mats and equipment shall be thoroughly cleaned and free of vegetation and soil before and after use. The introduction or spread of invasive plant or animal species on the project site caused by the site work shall be controlled.

b. No cultivars, invasive or other unacceptable plant species may be used for any mitigation, bioengineering, vegetative bank stabilization or any other work authorized by this GP. However, non-native species and cultivars may be used when it is appropriate and specified in a written verification, such as using *Secale cereale* (Annual Rye) to quickly stabilize a site. All PCNs should explain the reason for using non-native species or cultivars.

25. Programmatic Consultations or Agreements. The Corps requirements to comply with Section 106 of the NHPA, Section 7 of the Endangered Species Act or Essential Fish Habitat conservation under the Magnuson-Stevens Act may be satisfied by a Programmatic Agreement with the Corps, New England District or another federal action agency. Any Corps, New England District Programmatic Agreements will be available on our website.

26. Permit On Site. The permittee shall ensure that a copy of this GP and any accompanying authorization letter with attached plans are at the site of the work authorized by this GP whenever work is being performed and that all construction personnel performing work which may affect waters of the U.S. are aware of its terms and conditions. The entire permit authorization shall be made a part of any and all contracts and subcontracts for work that affects areas of Corps jurisdiction at the site of the work authorized by this GP. This shall be achieved by including the entire permit authorization in the specifications for work. The term "entire permit authorization" means this entire GP and the authorization letter (including its drawings, plans, appendices and other attachments) and also includes permit modifications. If the authorization letter is issued after the construction specifications, but before receipt of bids or quotes, the entire permit authorization shall be included as an addendum to the specifications. If the authorization letter is issued after receipt of bids or quotes, the entire permit authorization shall be included in the contract or subcontract. Although the permittee may assign various aspects of the work to different contractors or subcontractors, all contractors and subcontractors shall be obligated by contract to comply with all environmental protection provisions contained within the entire GP authorization, and no contract or subcontract shall require or allow unauthorized work in areas of Corps jurisdiction.

---

[16] For the purposes of this GP, plant species that are considered invasive and unacceptable are provided in Appendix G "Invasive and other Unacceptable Plant Species" of our document "Compensatory Mitigation Guidance" at www.nae.usace.army.mil/missions/regulatory >> Mitigation. Chapter 4(e) Planting is also particularly relevant. The June 2009 "Corps of Engineers Invasive Species Policy" provides policy, goals and objectives and is located at www.nae.usace.army.mil/missions/regulatory >> Invasive Species. Additional information can be found at: www.eddmaps.org/ipane.

27. Self-Verification Notification Form (SVNF). Permitees must complete and submit the SVNF provided at Appendix B to the Corps for work authorized by this GP unless otherwise noted in Appendix A. **NOTE: A copy of a state permit application form may be an acceptable surrogate for the SVNF provided either form used also include plans and an Official Species List of federally listed threatened or endangered species.**

28. Inspections. The permittee shall allow the Corps to inspect the authorized activity at any time deemed necessary to ensure that it is being or has been accomplished in accordance with the terms and conditions of this GP and any written verification. The Corps may also require post-construction engineering drawings for completed work, post-dredging survey drawings for any dredging work, or other post-construction reports. To facilitate these inspections, the permittee shall complete and return to the Corps the following forms:

- For Category 1/Self-Verification: The SVNF (see Appendix B).
- For Category 2/PCN: The a) Work-Start Notification Form and b) Compliance Certification Form, when either is provided with the authorization letter.

29. Maintenance

a. Any authorized structure or fill shall be properly maintained, including maintenance to ensure public safety and compliance with applicable general conditions and activity-specific conditions to a written verification.

b. The requirement in (a) above does not include maintenance of dredging projects. Each maintenance dredging event exceeding the self-verification limits requires a new PCN unless an unexpired, written PCN or other Corps authorization specifies that the permittee may "dredge and maintain" an area for a particular time period. Self-verification or PCN maintenance dredging includes only those areas and depths previously authorized and actually dredged. Maintenance dredging with ocean or open water disposal will always require a PCN and at least Category 2 review.

c. Some maintenance activities may not be subject to regulation under Section 404 in accordance with 33 CFR 323.4(a)(2). Refer to Appendix A, Endnote 7.

30. Property Rights. This GP does not convey any property rights, either in real estate or material, or any exclusive privileges, nor does it authorize any injury to property or invasion of rights or any infringement of federal, state, or local laws or regulations.

31. Transfer of GP Verifications. When the structures or work authorized by this GP are still in existence at the time the property is transferred, the terms and conditions of this GP, including any special conditions, will continue to be binding on the entity or individual who received the GP authorizations, as well as the new owner(s) of the property. If the permittee sells the property associated with a GP verification, the permittee may transfer the GP verification to the new owner by submitting a letter to the Corps (see Appendix E for address) to validate the transfer. A copy of the GP verification must be attached to the letter, and *the letter must contain the new owner's contact information and the following statement and signature:*

"When the structures or work authorized by this GP are still in existence at the time the property is transferred, the terms and conditions of this GP, including any special conditions, will continue to be binding on the new owner(s) of the property. To validate the transfer of this GP and the associated liabilities associated with compliance with its terms and conditions, have the transferee sign and date below."

_____

(Transferee)

_____

(Date)

32. Modification, Suspension, and Revocation. Any work authorized under this GP by self-verification or PCN may be either modified, suspended, or revoked, in whole or in part, pursuant to the policies and procedures of 33 CFR 325.7. Any such action shall not be the basis for any claim for damages against the U.S.

33. Special Conditions. The Corps may independently, or at the request of the federal resource agencies, impose other special conditions on a project authorized pursuant to this GP that are determined necessary to minimize adverse navigational and/or environmental effects or based on any other factor of the public interest. Failure to comply with all terms and conditions of the authorization, including special conditions, constitutes a permit violation and may subject the permittee to criminal, civil or administrative penalties and/or an ordered restoration.

34. False or Incomplete Information. If the Corps makes a determination regarding the eligibility of a project under this GP and subsequently discovers that it has relied on false, incomplete or inaccurate information provided by the permittee, the Corps may determine that the GP authorization is not valid; modify, suspend or revoke the authorization; and the U.S. Government may institute legal proceedings.

35. Abandonment. If the permittee decides to abandon the activity authorized under this GP, unless such abandonment is merely the transfer of property to a third party, he/she may be required to restore the area to the satisfaction of the Corps.

36. Enforcement cases. This GP does not apply to any existing or proposed activity in Corps jurisdiction associated with an ongoing Corps or EPA enforcement action, until such time as the enforcement action is resolved or the Corps or EPA, as appropriate, determines that the activity may proceed independently without compromising the enforcement action.

37. Duration of Authorization. This GP expires on October 12, 2020. Activities authorized under this GP that have commenced (i.e., are under construction) or are under contract to commence before this GP expires will have until October 12, 2021 to complete the activity under the terms and conditions of the current GP.

38. Previously Authorized Activities.

a. Projects that have received authorization (Category 1 or 2) from the Corps and that were completed under the previous PGPs, nationwide permits, regional general permits or letters of permission, shall remain authorized.

b. Activities authorized pursuant to 33 CFR Part 330.3 ("Activities occurring before certain dates") are not affected by this GP.

c. Any work not commenced nor completed that was authorized in a written letter from the Corps under the GP in effect between October 12, 2010 and October 12, 2015 remains authorized subject to the terms and general conditions of this GP along with any special conditions in the authorizing written letter. Exception – if previously authorized work is not commenced and a new federally listed threatened or endangered species could be affected, the Corps must consult with the Service(s) prior to re-authorizing the work under this GP. Requests for re-authorization must include an updated Official Species list. To request an Official Species List, refer to the instructions in Appendix D.

39. Discretionary Authority. Notwithstanding compliance with the terms and conditions of this permit, the Corps retains discretionary authority to require Category 2 or Individual Permit review based on concerns for the aquatic environment or for any other factor of the public interest [33 CFR 320.4(a)]. This authority is invoked on a case-by-case basis whenever the Corps determines that the potential consequences of the proposal warrant a higher level of review based on the concerns stated above. This authority may be invoked for projects that may contribute to cumulative environmental impacts that are more than minimal or if there is a special resource or concern associated with a particular project that is not already covered by the remaining conditions of the GP and that warrants greater review. Whenever the Corps notifies an applicant that an Individual Permit may be required, the project is not authorized under this GP and no work may be conducted until an Individual Permit is obtained or until the Corps notifies the applicant that further review has demonstrated that the work may proceed under this GP.

40. St. John/St. Croix Rivers. Work within the Saint John and Saint Croix River basins that requires approval of the International Joint Commission is not eligible for Category 1 and a PCN to the Corps is required if any temporary or permanent use, obstruction or diversion of international boundary waters could affect the natural

flow or levels of waters on the Canadian side of the line; or if any construction or maintenance of remedial works, protective works, dams, or other obstructions in waters downstream from boundary waters could raise the natural level of water on the Canadian side of the boundary.

41. National Lands. Activities that impinge upon the value of any National Wildlife Refuge, National Forest, National Marine Sanctuary, National Park or any other area administered by the National Park Service, U.S. Fish and Wildlife Service (USFWS) or U.S. Forest Service are not eligible for Category 1 and require a PCN.

42. Essential Fish Habitat (EFH). Any work in the following rivers and streams, including all tributaries to the extent that they are currently or were historically accessible for salmon migration, shall not be authorized under Category 1 of the GP and must be screened for potential impacts to EFH (see Appendix G for more information).

Androscoggin River	Aroostook River	Boyden River	Dennys River
Ducktrap River	East Machias River	Hobart Stream	Kennebec River
Machias River	Narraguagus River	Orland River	Passagassawaukeag River
Patten Stream	Penobscot River	Pleasant River	Presumpscot River
Saco River	Sheepscot River	St. Croix River	Tunk Stream
			Union River

The above does not apply to the following activities which may qualify for Category 1 work:

- Exploratory drilling and borings for bridges.
- Moorings (see Appendix A, Page 28 for Category 1 thresholds and requirements)
- Structures, floats & lifts (see Appendix A, Page 29 for Category 1 thresholds and requirements)
- Other activities specified in a programmatic agreement with NMFS.

43. Work Site Restoration

a. Wetland areas where permanent disturbance is not authorized shall be restored to their original condition and elevation, which under no circumstances shall be higher than the pre-construction elevation. Original condition means careful protection and/or removal of existing soil and vegetation, and replacement back to the original location such that the original soil layering and vegetation schemes are approximately the same, unless otherwise authorized.

b. Upon completion of construction, all disturbed wetland areas (the disturbance of these areas must be authorized) shall be properly stabilized. Any seed mix shall contain only plant species native to New England and shall not contain any species listed in the "Invasive and Other Unacceptable Plant Species" Appendix in the "New England District Compensatory Mitigation Guidance" (see GC 24 and refer to Appendix G). This list may be updated periodically.

c. In areas of authorized temporary disturbance, if trees are cut they shall be cut at ground level and not uprooted in order to prevent disruption to the wetland soil structure and to allow stump sprouts to revegetate the work area, unless otherwise authorized.

44. Bank Stabilization

a. Projects involving construction or reconstruction/maintenance of bank stabilization structures within Corps jurisdiction shall be designed to minimize environmental effects, effects to neighboring properties, scour, etc. to the maximum extent practicable.

b. Project proponents must design and construct bank stabilization projects using this sequential minimization process: avoidance of aquatic resource impacts, diversion of overland flow, vegetative stabilization, stone-sloped surfaces, and walls/bulkheads. Vertical walls/bulkheads shall only be used in situations where reflected wave energy can be tolerated.

c. Inland Water bank stabilization activities necessary for erosion prevention must meet all of the following criteria: i) No material is placed in excess of the minimum needed for erosion protection; ii) The activity is no more than 500 feet in total length along the bank(s); iii) The activity will not exceed an average of one cubic yard per running foot placed along the bank below the plane of the ordinary high water mark; iv) Structures angled steeper than 1H:1V and any material other than angular or sub-angular stone or fiber roll revetments require at least a Category 2 review; v) The activity does not involve discharges of dredged or fill

material into special aquatic sites; vi) No material is of the type, or is placed in any location, or in any manner, to impair surface water flow into or out of any water of the U.S.; vii) No material is placed in a manner that will be eroded by normal or expected high flows (properly anchored trees and treetops may be used in low energy areas); and viii) The activity is not a stream channelization activity.

d. Bank stabilization activities in tidal waters are provided at Appendix A, Page 30 & 31. Direct impacts in tidal waters from contiguous bank stabilization projects in excess of 200 linear feet (Applicant or Applicant + Abutters combined) must undergo Category 2 review.

45. Stream Work and Crossings & Wetland Crossings

Notes:

a. For *Stream Work and Crossings* below, conditions (a) and (b) apply to Inland Waters and Wetlands (see Appendix A, Page 1 for definition) and Navigable Waters (see Appendix A, Page 27 for definition). Conditions (c)-(l) below only apply to Inland Waters and Wetlands that are streams. All new and replacement crossings in Navigable Waters require an application to the Corps and at least a Category 2 review.

b. In-stream work in a watershed occupied by listed Atlantic salmon, Atlantic sturgeon, or shortnose sturgeon [see GC 8(b)] and some stream work such as crossings on EFH waters (see GC 42) is not eligible for Category 1.

c. "High-Quality Stream Segments" are shown at www.maine.gov/dep/gis/datamaps and may be useful in evaluating impacts to fisheries. GIS shape files are under "Other Google Earth Interactive Maps" and PDFs by county are under "DEP GIS Maps." See Appendix E for more state contact information.

Conditions for Stream Work and Crossings:

a. All permanent crossings of rivers, streams, brooks, etc. (hereon referred to as "streams") shall be suitably culverted, bridged, or otherwise designed to i) withstand and to prevent the restriction of high flows to qualify for Category 1, and ii) not obstruct the movement of or not substantially disrupt the necessary life-cycle movements of those species of aquatic life indigenous to the waterbody, including those species that normally migrate through the area, beyond the actual duration of construction unless the activity's primary purpose is to impound water to qualify for Category 1 or 2. *(NOTE: Areas of fill and/or cofferdams must be included in total waterway/wetlands impacts to determine applicability of this GP).*

b. Any work that temporarily or permanently impacts upstream or downstream flood conditions, or permanently impacts wetlands in excess of Category 1 thresholds, must be reviewed at least under Category 2. See the documents referenced in Appendix G, 8(c) and (d) for guidance.

c. New Stream Crossings. For new stream crossings to qualify for Category 1:

i. Must ensure compliance with GC 45(a) and GC 45(b) above.

ii. Shall be designed and constructed in accordance with the Corps General Stream Crossing Standards provided on Page 19 and the stream simulation document listed at Appendix G, 8(a).

d. Replacement Stream Crossings. For replacement stream crossings to qualify for Category 1:

i. Must ensure compliance with GC 45(a) and GC 45(b) above.

ii. Shall be designed and constructed in accordance with the Corps General Stream Crossing Standards provided on Page 19 and the stream simulation document listed at Appendix G, 8(a).

e. Culvert Extensions. Culvert extensions on culverts that do not meet the Corps General Stream Crossing Standards do not qualify for Category 1 and require an application to the Corps and at least Category 2 review.

f. Temporary Stream Crossings.

Note: The General Stream Crossing Standards don't apply to temporary stream crossings.

i. Temporary stream crossings or cofferdams shall be used for equipment access across streams [see Appendix G, 8(e)]. Note: Areas of fill and/or cofferdams must be included in total waterway/wetlands impacts to determine the review category in Appendix A.

ii. Temporary stream crossings shall be removed within 180 days to qualify for Category 1.

iii. Temporary stream crossings that are not spans[17] (typically culverts) must be designed in accordance with 1-6 below to qualify for Category 1. Category 2 applications should include information demonstrating 2-6 below:

1. Installed and removed during the low flow period specified in GC 45(l) below.
2. Placed on geotextile fabric or other material where practicable to ensure restoration to the original grade. Soil may not be used to construct or stabilize these structures and rock must be large enough to allow for easy removal without disrupting the streambed.
3. Designed and maintained to withstand and pass high flows. Water height should be no higher than the top of the culvert's inlet. A minimum culvert diameter of two feet is required to pass debris. Culverts must be aligned to prevent bank erosion or streambed scour.
4. Equipped with energy dissipating devices installed downstream if necessary to prevent scour.
5. Designed and maintained to prevent soil from entering the waterbody.
6. Removed upon the completion of work. Impacts to the streambed or banks requires restoration to their original condition using stream simulation methods[18].

g. Slip Lining. Work using slip lining (retrofitting an existing culvert by inserting a smaller diameter pipe), invert lining, or resulting in decreased diameter, does not qualify for Category 1, either as new work or maintenance activities.

h. Work in Flowing Waters. To qualify for Category 1, no unconfined fill [see GC 14(b)] or excavation in flowing waters is allowed. To accomplish this:

i. Bank stabilization work below ordinary high water (OHW) shall utilize erosion controls such as inflatable cofferdams, jersey barrier, silt screen, turbidity curtain, etc. where practicable to prevent sediment input to the stream and to minimize turbidity and sedimentation impacts for sensitive life stages. Bank stabilization above OHW must utilize erosion controls.

ii. Management techniques such as temporary flume pipes, culverts, cofferdams, etc. must be used to maintain normal flows within the stream boundary's confines, or water diversions may be used immediately up and downstream of the work footprint (see Appendix A, Endnote 6) or work must be performed in the dry under no flow conditions, or under very low flow conditions following the practices in GC 45(a).

i. Minimization. In order to make the Category 2 review process more efficient and result in a faster decision, new and replacement stream crossings should be designed using the least intrusive and environmentally damaging method following this sequential minimization process: 1) spans with no stream impacts, 2) spans with stream impacts, and 3) embedded culverts with stream simulation or low-slope design.

j. Maintenance Requirements. The permittee shall maintain the work authorized herein in good condition and in conformance with the terms and general conditions of this permit to facilitate aquatic life passage as stated in GC 45(a). Culverts that develop "hanging" inlets or outlets, result in bed washout, or a stream that doesn't match the characteristics of the substrate in the natural stream channel such as mobility, slope, stability confinement will require maintenance or repair to comply with this GC. This does not apply to GC 45(f) above.

k. Maintenance and Replacement Information. An existing stream crossing must be authorized and in compliance with all conditions of its authorization(s) to qualify for maintenance not subject to regulation. See Appendix A, Endnote 7. A non-serviceable crossing is not eligible for maintenance and is therefore considered as a replacement crossing [see GC 45(d)].

l. Work Window. For projects that otherwise meet the terms of Category 1, in-stream construction work shall be conducted during the low flow period July 15 – September 30 in any year. Projects that are not to be conducted during that time period are ineligible for Category 1 and shall be screened pursuant to Category 2, regardless of the waterway and wetland fill and/or impact area.

Corps General Stream Crossing Standards (required for Category 1; *recommended* for Category 2):

a. Culverts must be embedded:

---

[17] For the purposes of this GP, spans are bridges, three-sided box culverts, open-bottom culverts or arches that span the stream with footings landward of bankfull width.

[18] Design and construction shall be in accordance with the stream simulation document listed at Appendix G, 8(a).

- ≥ 2 feet for box culverts and other culverts with smooth internal walls,
- ≥ 1 foot for corrugated pipe arches
- ≥ 1 foot and at least 25 percent for corrugated round pipe culverts

b. **For new crossings**, spans[17] are required to avoid or cause minimal disruption to the streambed and to meet the requirements of General Condition 45(a) and 45(b). Footings and abutments must be landward of 1.2 times bankfull width. To the greatest extent practicable, work in the stream shall be minimized, and design and construction shall allow the streambed's natural structure and integrity to remain intact. Any fill or excavation of the streambed below bankfull width other than footings, support pilings, or work specified in 45(h)ii requires Category 2 review and, unless demonstrated otherwise, stream simulation[18] to establish substrate and banks in the span structure and work area as specified in (d) and (e) below.

c. **For replacement crossings**, spans[17] are required to meet the requirements of General Condition 45(a) and 45(b). Footings and abutments shall be landward of 1.2 times bankfull width. Unless demonstrated otherwise, stream simulation[18] is required to establish substrate and banks in the span structure and work area as specified in (d) and (e) below.

d. Crossings must have a natural bottom substrate within the structure matching the characteristics of the substrate in the natural stream channel and the banks (mobility, slope, stability, confinement, grain and rock size) at the time of construction and over time as the structure has had the opportunity to pass significant flood events. To allow terrestrial passage for wildlife and prevent undermining the footings, crossings shall have a bank on both sides of the stream matching the horizontal profile of the existing stream and banks[18]. Note: Installation of substrate material within smaller culverts may not be safe or practicable. In these cases, it may be necessary to allow for natural deposition and bed development unless alternative methods are identified.

e. Crossings must be designed and constructed[18] with appropriate bed forms and streambed characteristics so that water depths and velocities are comparable to those found in the natural channel at a variety of flows. In order to provide appropriate water depths and velocities at a variety of flows and especially low flows, it is usually necessary to reconstruct the streambed or preserve the natural channel within the structure. Otherwise, the width of the structure needed to accommodate higher flows will create conditions that are too shallow at low flows. The grain and rock size, and arrangement of streambed materials within the structure should be in accordance with (d) above. Flows could go subsurface within the structure if only large material is used without smaller material filling the voids.

Conditions for Wetland Crossings:

a. All temporary and permanent crossings of wetlands shall be suitably culverted, bridged, or otherwise designed to: i) Withstand and prevent the restriction of high flows, ii) Not obstruct the movement of or not substantially disrupt the necessary life-cycle movements of those species of aquatic life indigenous to the wetland, including those species that normally migrate through the area, beyond the actual duration of construction unless the activity's primary purpose is to impound water. See Appendix E for the Maine DEP's crossing standards.

b. To qualify for Category 1, new and replacement wetland crossings that are permanent shall be culverted, spanned or bridged in such a manner as to preserve hydraulic and ecological connectivity, at its present level, between the wetlands on either side of the road. To meet this requirement, we recommend that culverts, spans or bridges be placed at least every 50 feet with an opening at least 2 feet high and 3 feet wide at ground level where practicable. Closed bottom culverts shall be embedded at least 6 inches with a natural bottom.

c. In the case of non-compliance, the permittee shall take necessary measures to correct wetland damage due to lack of hydraulic and ecological connectivity.

d. Any work that results in flooding, results in impacts to wetlands on either side of the wetland crossing in excess of Category 1 thresholds, or impacts wetland drainage from the upgradient side of the wetland crossing does not qualify for Category 1.

Robert J. Desista
Deputy Chief, Regulatory Division
For DISTRICT ENGINEER **DATE** 10/13/15

APPENDIX A: DEFINITION OF CATEGORIES		
A. INLAND WATERS AND WETLANDS	**Inland Waters and Wetlands:** Waters that are regulated under Section 404 of the Clean Water Act, including rivers, streams, lakes, ponds and wetlands, and ***excluding Section 10 Navigable Waters of the U.S. (tidal and freshwater).*** The jurisdictional limits are the ordinary high water (OHW) mark in the absence of adjacent wetlands, beyond the OHW mark to the limit of adjacent wetlands when adjacent wetlands are present, and the wetland limit when only wetlands are present. For the purposes of this GP and designated activities, fill placed in the area between the mean high water (MHW) and the high tide line (HTL), and in the bordering and contiguous wetlands[1] to tidal waters are reviewed in the Navigable Waters section. (See B. Navigable Waters on page 27 below.)	
	Projects not meeting Category 1 require an application for review as a Category 2 or Individual Permit project. All Category 1 and 2 projects must comply with all of this GP's applicable terms (Pages 1 – 4) and General Conditions (Pages 5–20).	
ACTIVITY	**CATEGORY 1** Self-Verification Eligible (***SVNF Required***)	**CATEGORY 2 (*PCN Required*)**
1. Repair, Replacement, Expansion, and Maintenance of Authorized Structures and Fills	Repair or maintenance of existing, currently serviceable, authorized fills with no expansion or change in use: • Conditions of the original authorization apply. • Minor deviations in fill design allowed.[7] • The repair, rehabilitation, or replacement of those structures or fills destroyed or damaged by storms, floods, fire or other discrete events is authorized, provided the repair, rehabilitation, or replacement is commenced, or is under contract to commence, within two years of the date of their destruction or damage. • No effect on federally listed endangered or threatened species or critical habitat.	Replacement of non-serviceable fills, or repair/maintenance of serviceable fill, with expansion <3 acres, or with a change in use.
2. Moorings	NA – moorings in non-navigable inland waters are not subject to Corps jurisdiction. Note: Moorings placed in freshwater navigable waters are reviewed in the Navigable Waters section. (See B. Navigable Waters on Page 28 below.)	NA
3. Structures, Floats & Lifts	For solid fill or crib supported structures on inland waters, <15,000 square feet (SF) of waterway and/or wetland fill, associated secondary impacts[2], and temporary fills. • No effect on federally listed endangered or threatened species or critical habitat. • Note: Temporary or permanent structures placed in freshwater navigable waters are reviewed in the Navigable Waters section. (See B. Navigable Waters on page 29 below.	1. Work not eligible for Category 1 2. ≥15,000 SF to <3 acres of inland waterway and/or wetland fill and associated secondary impacts (e.g., areas drained, flooded, fragmented, or excavated).
4. Aids to Navigation and Temporary Recreational Structures	NA - this activity in non-navigable inland waters is not subject to Corps jurisdiction. Note: Aids to Navigation and other structures placed in freshwater navigable waters are reviewed in the Navigable Waters section. (See B. Navigable Waters on page 30 below.)	NA

5. Dredging, Disposal of Dredged Material, Beach Nourishment, and Rock Removal and Relocation	1. For regulated discharges associated with excavation, and disposal <15,000 SF inland waterway and/or wetland impacts. 2. The activity does not occur in navigable waters of the U.S. 3. Stream channelization, relocation or loss of streambed including impoundments or discharge of tailings into streams does not occur. 4. No effect on federally listed endangered or threatened species or critical habitat.	1. Work not eligible for Category 1 2. ≥15,000 SF to <3 acres of inland waters.
6. Discharges of Dredged or Fill Material Incidental to the Construction of Bridges	NA - For discharges incidental to the construction of bridges in inland waters of the U.S. refer to Activity 23 (Stream and Wetland Crossings) and GC 45. Note: Discharges of Dredged or Fill Material Incidental to the Construction of Bridges in freshwater navigable waters are reviewed in the Navigable Waters section. (See B. Navigable Waters on page 30 below.)	NA
7. Bank and Shoreline Stabilization	Inland bank stabilization <500 FT long and ≤1 CY of fill per linear foot below OHW, provided: • ≤1 cubic yard of fill per linear foot placed along the bank waterward of ordinary high water. • Work complies with the GCs (GC 44 in particular), including: o No structures angled steeper than 1H:1V allowed. Only rough-faced stone or fiber roll revetments allowed. o No in-stream work involving fill or excavation in flowing waters (see GC 45(h)). • In-water work limited to Jul 15 – Sep 30. • No work in vernal pools[5] or SAS[3]. • No effect on federally listed endangered or threatened species or critical habitat.	Work not eligible for Category 1
8. Residential, Commercial, Industrial, and Institutional Developments, and Recreational Facilities	1. <15,000 SF of inland waterway and/or wetland fill and associated secondary impacts[2] (e.g., areas drained, flooded, fragmented, mechanically cleared or excavated). Fill area includes all temporary and permanent fill, and regulated discharges associated with excavation. Construction mats are considered as fill. [See GC 14] <u>Provided:</u> • Historic fill + proposed impact area <15,000 SF complies with GC 5, Single and Complete Projects. • No work in special aquatic sites (SAS)[4] other than wetlands. • No effect on federally listed endangered or threatened species or critical habitat. 2. For work in Vernal Pool (VP) Management Areas (includes VPs)[5]:	1. Work not eligible for Category 1. 2. ≥15,000 SF to <3 acres of inland waterway and/or wetland fill and associated secondary impacts (e.g., areas drained, flooded, fragmented, or excavated). Fill area includes all temporary and permanent fill (including mats), and regulated discharges associated with excavation. 3. *Mechanical clearing without grubbing or other soil disturbance >3 acres as a secondary impact may still be eligible for Category 2 at the discretion of the Corps.* See GC 2 and Appendix C for wetland delineation

	• See GC 23 and Appendix C for VP delineation requirements. • See GC 23 to determine if work qualifies for Category 1 or 2. • See Appendix G for VP documents providing mitigation guidance.	requirements.
9. Utility Line Activities	1. <15,000 SF of inland waterway and/or wetland fill, associated secondary impacts[2], and temporary fills. 2. The activity does not occur in, over, or under navigable waters of the U.S. 3. Intake structures that are dry hydrants used exclusively for firefighting activities with no stream impoundments. 4. There is no permanent change in pre-construction contours in waters of the U.S. 5. Material resulting from trench excavation is temporarily side cast into waters of the U.S. for ≤ 3 months and is placed in such a manner that it is not dispersed by currents or other forces. 6. The utility line is placed within and does not run a) parallel to, or b) along a streambed. 7. Stream channelization, relocation or loss of streambed including impoundments does not occur. 8. No effect on federally listed endangered or threatened species or critical habitat. 9. There is no discharge in SAS other than non-tidal wetlands. 10. Construction mats[4] of any area necessary to conduct activities that were previously authorized, authorized under Category 1, or not subject to regulation (see Endnote 7). Authorized construction mats must be in place for <3 months, removed immediately upon work completion, and the wetlands must be restored (see GC 43). 11. Stream crossings must comply with GC 17.	1. Work not eligible for Category 1 2. ≥15,000 SF to <3 acres of inland waterway and/or wetland fill and associated secondary impacts (e.g., areas drained, flooded, fragmented, or excavated). Fill area includes all temporary and permanent fill (including mats), and regulated discharges associated with excavation. 3. *Mechanical clearing without grubbing or other soil disturbance >3 acres as a secondary impact may still be eligible for Category 2 at the discretion of the Corps.*
10. Linear Transportation Projects *(not including stream crossings)* **For stream crossings, refer to Activity 23**	1. <15,000 SF of inland waterway and/or wetland fill associated secondary impacts (e.g., areas drained, flooded, fragmented, mechanically cleared or excavated). Fill area includes all temporary and permanent fill, and regulated discharges associated with excavation. Construction mats are considered fill. (See GC 14.) Provided: • Historic fill + proposed impact area <15,000 SF and complies with GC 5 single and complete projects. • No work in special aquatic sites (SAS) other than wetlands. 2. Construction mats[4] of any area necessary to conduct activities that were previously authorized, authorized under Category 1, or not subject to regulation (see Endnote 7). Authorized construction mats must be in place for <3 months, removed immediately upon work completion, and the wetlands must be restored (see GC 43). 3. No effect on federally listed endangered or threatened species or critical habitat.	1. ≥15,000 SF to <3 acres of inland waterway and/or wetland fill and associated secondary impacts (e.g., areas drained, flooded, fragmented, or excavated). Fill area includes all temporary and permanent fill (including mats), and regulated discharges associated with excavation. 2. *Mechanical clearing without grubbing or other soil disturbance >3 acres as a secondary impact may still be eligible for Category 2 at the discretion of the Corps.*

11. Mining Activities	1. <15,000 SF of inland waterway and/or wetland fill, associated secondary impacts, and temporary impacts. 2. The activity does not occur in navigable waters of the U.S. 3. Stream channelization, relocation or loss of streambed including impoundments or discharge of tailings into streams does not occur. 4. No effect on federally listed endangered or threatened species or critical habitat.	1. Work not eligible for Category 1. 2. ≥15,000 SF to <3 acres of inland waterway and/or wetland fill and associated secondary impacts (e.g., areas drained, flooded, fragmented, or excavated). Fill area includes all temporary and permanent fill (including mats), and regulated discharges associated with excavation.
12. Boat Ramps	1. <15,000 SF of inland waterway and/or wetland fill, associated secondary impacts, and temporary impacts. 2. No effect on federally listed endangered or threatened species or critical habitat.	1. Work not eligible for Category 1 2. >15,000 SF and < 3 acres of impact.
13. Land and Water-Based Renewable Energy Generation Facilities and Hydropower Projects	*For land-based facilities:* 1. <15,000 SF of inland waterway and/or wetland fill, associated secondary impacts, and temporary impacts. 2. Stream channelization, relocation or loss of streambed including impoundments does not occur. 3. No effect on federally listed endangered or threatened species or critical habitat. *For water-based facilities and hydropower projects:* No new facilities are eligible.	*For land-based activities:* 1. Work not eligible for Category 1. 2. >15,000 SF and < 3 acres impact. 3. *Mechanical clearing without grubbing or other soil disturbance >3 acres as a secondary impact may still be eligible for Category 2 at the discretion of the Corps.* *For water-based facilities and hydropower projects:* > 3 acres of impact will require an IP.
14. Reshaping Existing Drainage Ditches & Mosquito Management	Not Applicable	Not Applicable
15. Oil Spill and Hazardous Material Cleanup	Jurisdictional activities required for the containment and cleanup of oil and hazardous substances that are subject to the National Oil and Hazardous Substances Pollution Contingency Plan (40 CFR 300) provided that the work is done in accordance with the Spill Control and Countermeasure Plan required by 40 CFR 112.3 or any existing state contingency plan and provided that the Regional Response Team (if one exists in the area) concurs with the proposed containment and cleanup action. SAS[3] must typically be restored in place at the same elevation. ***Note: SVNF or a surrogate state reporting form may be submitted after the fact.***	Work not eligible for Category 1

16. Cleanup of Hazardous and toxic waste	Specific jurisdictional activities to effect the containment, stabilization, or removal of hazardous or toxic waste materials, including court ordered remedial action plans or related settlements, which are performed, ordered or sponsored by a government agency with established legal or regulatory authority. SAS should be restored in place at the same elevation. • <15,000 SF of inland waterway and/or wetland fill, associated secondary impacts, and temporary impacts. • No stream channelization, relocation or loss of streambed occurs. • The project does not involve establishing new disposal sites or expanding existing sites used for the disposal of hazardous or toxic waste. • No effect on federally listed endangered or threatened species or critical habitat.	Work not eligible for Category 1
17. Scientific Measurements Devices	1. Scientific measurement devices whose purpose is to measure and record scientific data, such as staff gages, water recording devices, water quality testing and improvement devices, and similar structures. This excludes any biological sampling devices. Structures may not restrict or concentrate movement of aquatic organisms. 2. No effect on federally listed endangered or threatened species or critical habitat.	Work not eligible for Category 1
18. Survey Activities	1. Jurisdictional survey activities, such as core sampling, seismic exploratory operations, plugging of seismic shot holes and other exploratory-type bore holes, exploratory trenching, soil surveys, sampling, and historic resources surveys (but not recovery). Exploratory trenches must be restored in accordance with GC 43. The construction of temporary pads is authorized provided the discharge doesn't exceed 25 CY. This doesn't authorize permanent structures or the drilling and the discharge of excavated material from test wells for oil and gas exploration (the plugging of such wells is authorized). 2. No effect on federally listed endangered or threatened species or critical habitat.	Work not eligible for Category 1
19. Agricultural Activities	1. For those activities subject to Corps jurisdiction[16], <15,000 SF of inland waterway and/or wetland fill, associated secondary impacts, and temporary impacts. 2. No stream channelization, relocation, loss of streambed, or farm ponds in streams. 3. No effect on federally listed endangered or threatened species or critical habitat.	1. ≥15,000 SF to <3 acres of inland waterway and/or wetland fill and associated secondary impacts (e.g., areas drained, flooded, fragmented, or excavated). Fill area includes all temporary and permanent fill (including mats), and regulated discharges associated with excavation. 2. > 3 acres of impact will require an IP.

20. Fish and Wildlife Harvesting, Enhancement and Attraction Devices and Activities	NA - this activity in non-navigable inland waters, if not involving a discharge of dredged or fill material, is not subject to Corps jurisdiction. Note: Related structures placed in freshwater navigable waters (e.g. the upper Penobscot or Kennebec Rivers) are reviewed in the Navigable Waters section. (See B. Navigable Waters on Page 33 below.)	Not Applicable
21. Habitat Restoration, Establishment and Enhancement Activities	1. <15,000 SF of inland waterway and/or wetland fill, associated secondary impacts, and temporary impacts. 2. The activity is supported in writing by a local, state, or non-Corps Federal environmental agency. Water impoundments require PCN. 3. No conversion of i) a stream to wetland or vice versa, wetland to a pond or uplands, and ii) one wetland type to another. 4. No dam removal. 5. No effect on federally listed endangered or threatened species or critical habitat.	1. Work not eligible for Category 1 2. Aquatic habitat restoration, establishment, and enhancement of wetlands and riparian areas and the restoration and enhancement of streams and other open waters with impacts of any area ≥15,000 SF, provided those activities result in net increase in overall aquatic resource functions and services.[8]
22. Previously Authorized Activities	Any work not commenced nor completed that was authorized in a written letter from the Corps under the GP in effect between October 12, 2010 and October 12, 2015. The terms and general conditions of this GP apply along with any special conditions in the written authorization.	
23. Stream & Wetland Crossings	1. River, stream and brook work and crossings: • Must comply with GC 45 in particular, including: o No slip lining [see GC 45 (g)]. o No in-stream work involving fill or excavation in flowing waters [see GC 45(h)]. o In-stream work limited to Jul 15 – Sep 30 [see GC 45 (l)]. • No work in riffles and pools[3]. • No stream relocations. • No dams or dikes[6]. • No effect on federally listed endangered or threatened species or critical habitat. • <15,000 SF of inland waterway and/or wetland fill, associated secondary impacts, and temporary impacts. 2. Wetland crossings must comply with the particularly relevant GC 45.	Work not eligible for Category 1
24. Aquaculture (freshwater)	For land based installations, <15,000 SF of inland waterway and/or wetland fill, associated secondary impacts, and temporary impacts. • In-stream/in-water work limited to Jul 15 – Sep 30. • No effect on federally listed endangered or threatened species or critical habitat. Note: Related structures placed in freshwater navigable waters are reviewed in the Navigable Waters section. (See B. Navigable Waters, below.)	Work not eligible for Category 1

B. NAVIGABLE WATERS	**Navigable Waters of the United States**: Waters that are subject to the ebb and flow of the tide and/or the tidal and non-tidal portions of the Federally designated navigable waters (the Penobscot River, Kennebec River, and Lake Umbagog) (Section 10 Rivers and Harbors Act of 1899). The jurisdictional limits are the mean high water (MHW) line in tidal waters and the ordinary high water (OHW) mark in non-tidal portions of the federally designated navigable rivers. For the purposes of this GP, fill placed in the area between the mean high water (MHW) and the high tide line (HTL), and in the bordering and contiguous wetlands[1] to tidal waters are also reviewed in this Navigable Waters section.	
	Projects not meeting Category 1 require an application for review as a Category 2 or Individual Permit project. All Category 1 and 2 projects must comply with all of this GP's applicable terms (Pages 1 - 4) and General Conditions (Pages 5 - 20).	
ACTIVITY	**CATEGORY 1** Self-Verification Eligible ***(SVNF Required)***	**CATEGORY 2** ***(PCN Required)***
1. Repair, Replacement, Expansion, and Maintenance of Authorized (or grandfathered) Structures and Fills	1.Repair, replacement in-kind, or maintenance[7] of existing, currently serviceable[7], authorized structures or fills: • All work is to be conducted in-the-dry, during low water. • Conditions of the original authorization apply. • No substantial expansion or change in use. • No new fill in SAS[3]. • Must be rebuilt in same footprint, however minor deviations in structure design allowed[7]. • The repair, rehabilitation, or replacement of those structures or fills destroyed or damaged by storms, floods, fire or other discrete events is authorized, provided the repair, rehabilitation, or replacement is commenced, or is under contract to commence, within two years of the date of their destruction or damage.	1. Replacement of non-serviceable structures and fills or repair/maintenance of serviceable structures or fills, with fill, replacement or expansion <1 acre, or with a change in use. 2. <1 acre temporary or permanent fill, excavation and/or secondary impacts. Fill area includes all temporary and permanent waterway fills, provided: • Temporary or permanent fill in eelgrass[14] <1000 SF. • Permanent fill in SAS (excluding eelgrass[14]) <4300 SF. 3. Standard Pile Driving Conditions. Work involving piles shall adhere to one of the four methods below: • Piles installed in-the-dry during low water or in-water between Nov. 8th - Apr. 9th, or • Must be drilled and pinned to ledge, or • Vibratory hammers used to install any size and quantity of wood, concrete or steel piles, or • Impact hammers limited to one hammer and <50 piles installed/day with the following: wood piles of any size, concrete piles ≤18-inches diameter, steel piles <12-inches diameter if the hammer is ≤3000 lbs and a wood cushion is used between the hammer and steel pile, and • For the methods above: o In-water noise levels shall not exceed >187dB cSEL re 1μPa or 206dB peak re 1μPa at a distance >10m from the pile being installed, and o In-water noise levels >150dB peak re 1μPa shall not exceed 12 consecutive hours on any given day and a 12 hour recovery period (i.e., in-water noise below 150dB peak re 1μPa) must be provided between work days. • Existing derelict, degraded or abandoned piles in the project area that are affected by project activities should be removed and properly disposed of in an upland location landward of MHW or OHW and not in wetlands, tidal wetlands, their substrate or mudflats.

2. Moorings	1. Private, non-commercial, non-rental, single-boat moorings, provided: • Authorized by the local harbormaster/town. • Not associated with any boating facility.[11] • Boat or mooring not located in a Federal Navigation Project or buffer zone[12] other than in a Federal Anchorage[12]. Moorings in a Federal Anchorage not associated with a boating facility[11] and are not for rent. • No interference with navigation. • No new moorings located in SAS[3]. Prior to installation of moorings, a site-specific eelgrass survey should be conducted to document that eelgrass is not present. • When existing, authorized moorings in SAS[3] are going to be replaced, they should be replaced with low impact mooring technology that prevents mooring chains from resting or dragging on the bottom substrate at all tides and helical anchors, or equivalent SAS protection systems where practicable. 2. Minor relocation of previously authorized moorings, provided: • Authorized by the local harbormaster/town. • Not located in SAS[3] • No interference with navigation. • Cannot be relocated into a Federal Navigation Project[12] other than a Federal Anchorage[12] ***Note: Cat 1 eligible moorings do not require SVNF.***	1. Moorings associated with an existing boating facility[11]. An eelgrass[14] survey may be required. 2. Moorings that don't meet the terms in Category 1 and don't require an Individual Permit. This includes private moorings with no harbormaster or means of local approval. 3. Moorings located such that they, and/or vessels docked or moored at them, are within the buffer zone of the horizontal limits[13] of a Federal Channel[12]. (See Appendix H.) The buffer zone is equal to 3 times the authorized depth of that channel. 4. An IP is required for moorings within the horizontal limits[11], or with moored vessels that extend, into the horizontal limits of a Federal Navigation Project[12], except those in Federal Anchorages[12]. *For 1-4 above, siting of new individual moorings in SAS[3], including eelgrass[14], should be avoided to the maximum extent practicable. If SAS[3] cannot be avoided, plans should show elastic mooring systems that prevent mooring chains from resting or dragging on the bottom substrate at all tides and helical anchors, or equivalent SAS protection systems, where practicable. For moorings that appear to impact SAS, the Corps may require an eelgrass survey.*
3. Structures, Floats and Lifts	1. Reconfiguration of existing authorized structures shall occur in-the-dry during low water. 2. Minor relocation of <u>previously authorized</u> floats or moored floats/lobster cars, provided: • Authorized by the local harbormaster/town. • Not located in SAS[3]. • No interference with navigation. • Cannot be relocated into a Federal Navigation Project[12] other than a Federal Anchorage[12].	1. New structures or floats, including floatways/skidways, built to access waterway (seasonal and permanent). Includes both pile supported and crib supported structures. 2. Expansions to existing boating facilities[11] • *Pile-supported structures <400 SF, with attached floats totaling ≤200 SF.* • *Structures are ≤4' wide and have at least a 1:1 height:width ratio[11].* • *Floats supported a minimum of 18" above the substrate during all tides.* • *Structures & floats not located within 25' of any eelgrass[8].* • *Moored vessels not positioned over SAS[3].*

		• *The Corps may require a letter of no objection from the abutter if structure is to be within 25 feet of the property line.* • *No structure extends across >25% of the waterway width at mean low water.* • *Not located within the buffer zone of the horizontal limits[13] of a Corps Federal Navigation Project (FNP) (Appendix F). The buffer zone is equal to three times the authorized depth of that FNP.* 3. An Individual Permit is required for structures or floats, including floatways/skidways, located such that they and/or vessels docked or moored at them are within the horizontal limits[13] of a Corps Federal Navigation Project[12] (see Appendix H). 4. An Individual Permit is required for structures & floats associated with a new or previously unauthorized boating facility[11]. 5. Standard Pile Driving Conditions. Work involving piles shall adhere to one of the four methods below: • Piles installed in-the-dry during low water or in-water between Nov. 8th - Apr. 9th, or • Must be drilled and pinned to ledge, or • Vibratory hammers used to install any size and quantity of wood, concrete or steel piles, or • Impact hammers limited to one hammer and <50 piles installed/day with the following: wood piles of any size, concrete piles ≤18-inches diameter, steel piles <12-inches diameter if the hammer is ≤3000 lbs and a wood cushion is used between the hammer and steel pile, and • For the methods above: o In-water noise levels shall not exceed >187dB cSEL re 1μPa or 206dB peak re 1μPa at a distance >10m from the pile being installed, and o In-water noise levels >150dB peak re 1μPa shall not exceed 12 consecutive hours on any given day and a 12 hour recovery period (i.e., in-water noise below 150dB peak re 1μPa) must be provided between work days. • Existing derelict, degraded or abandoned piles in the project area that are affected by project activities should be removed and properly disposed of in an upland location landward of MHW or OHW and not in wetlands, tidal wetlands, their substrate or mudflats.

4. Aids to Navigation and Temporary Recreational Structures	1. Temporary buoys, markers, floats, etc. for recreational use during specific events, provided they are removed within 30 days after use is discontinued. 2. The placement of aids to navigation and regulatory markers which are approved by and installed in accordance with the requirements of the U.S. Coast Guard. (See 33 CFR 66, Chapter I, subchapter C)." ***Note: Cat 1 eligible aids to navigation and regulatory markers do not require SVNF.***	Work not eligible for Category 1
5. Dredging, Disposal of Dredged Material, Beach Nourishment, and Rock Removal and Relocation	1. Maintenance dredging[10] for navigational purposes <1,000 CY with upland disposal. Includes return water from upland contained disposal area, provided: • Proper siltation controls are used. • Dredging & disposal operation limited to Nov. 8 – Apr. 9. • No impact to SAS[3]. • No dredging in intertidal areas. • No dredging within 100' of shellfish beds. • No dredging in areas designated as Critical Habitat for Atlantic salmon [see GC 8(b) & (c)]. • For dredging in tidal waters outside of Atlantic salmon critical habitat, applicants must contact NMFS (see GC 8) to ensure no impacts to listed species such as shortnose sturgeon, Atlantic surgeon, and listed sturgeon critical habitat. • Project proponents must contact the USFWS for work on coastal beaches to ensure no impacts to piping plovers, roseate terns, rufa red knot, or their habitat [see GC 8(c)]. • No underwater blasting. 2. Maintenance dredging is not eligible for Category 1 if conducted in tidal portions of the Penobscot river upstream of a line extending from Turner Point in Castine to Moose Point (formerly Squaw Point) on Cape Jellison in Stockton Springs or in tidal portions of the Kennebec or Androscoggin Rivers upstream of a line extending from Doubling Point in Arrowsic to Hospital Point in West Bath.	1. Maintenance dredging[10] ≥1,000 CY, new dredging <25,000 CY, or projects not meeting Category 1. Includes return water from upland contained disposal areas. Disposal includes: • Upland. • Beach nourishment (above mean high water) of any area provided the dredging's primary purpose is navigation or the sand is from an upland source. • Open water & confined aquatic disposal, if Corps finds the material suitable. 2. Beach nourishment associated with dredging when the primary purpose is not navigation requires at least a Category 2 review. 3. Maintenance or new dredging[10] and/or disposal in or affecting a SAS[3] requires an Individual Permit.

6. Discharges of Dredged or Fill Material Incidental to the Construction of Bridges	1. Discharges of dredged or fill material incidental to the construction of bridges across navigable waters of the U.S., including cofferdams, abutments, foundation seals, piers, and temporary construction and access fills provided the U.S. Coast Guard authorizes such discharges as part of the bridge permit or appropriate approval. 2. Causeways and approach fills are not included in this category and require Category 2 or Individual Permit authorization.	<1 acre temporary or permanent fill, excavation and/or secondary impacts (e.g., areas drained, flooded, fragmented or mechanically cleared). Fill area includes all temporary and permanent waterway fills, provided: • Temporary or permanent fill in eelgrass[14] <1000 SF. • Permanent fill in SAS (excluding eelgrass[14]) <4300 SF.
7. Bank and Shoreline Stabilization	1. Bank stabilization projects <200 linear feet provided: • ≤1 cubic yard of fill per linear foot placed along the bank waterward of high tide line. No fill or equipment will occur in SAS[3]. • Work conducted in the intertidal zone must be conducted in-the-dry during low water. • No structures angled steeper than 1H:1V and only rough-faced stone or fiber roll revetments allowed. • No driving of piles or sheeting. 2. Bank stabilization projects in excess of 200 linear feet (Applicant or Applicant + Abutters combined) must undergo Category 2 review.	1. Work not eligible for Category 1. 2. <1 acre temporary or permanent fill, excavation and/or secondary impacts (e.g., areas drained, flooded, fragmented or mechanically cleared). Fill area includes all temporary and permanent waterway fills, provided: • Temporary or permanent fill in eelgrass[14] <1000 SF. • Permanent fill in SAS (excluding eelgrass[14]) <4300 SF.
8. Residential, Commercial, Industrial, and Institutional Developments, and Recreational Facilities	Not Eligible	1. <1 acre temporary or permanent fill, excavation and/or secondary impacts (e.g., areas drained, flooded, fragmented or mechanically cleared). Fill area includes all temporary and permanent waterway fills, provided: • Temporary or permanent fill in eelgrass[14] <1000 SF. • Permanent fill in SAS (excluding eelgrass[14]) <4300 SF. 2. Conversions of previously authorized pile supported buildings over navigable waters to residences, offices, or other non-water dependent uses require at least a Category 2 review. 3. Floating house boats or businesses on floats require Category 2 review.
9. Utility Line Activities	1. Repair or maintenance of existing, currently serviceable, authorized utilities with no expansion or change in use: • Conditions of the original authorization apply. • Trenching or filling is confined to the existing footprint. • In water work conducted between Nov 8 and Apr 9. • No new impact to SAS. 2. Particularly relevant is GC12. 3. New work in, over, or under navigable waters requires a PCN and Category 2 review. 4. Except for aerial utility lines, work is not eligible for Category 1 if conducted in tidal portions of the Penobscot River upstream of a line extending from Turner Point in Castine to Moose Point (formerly	1. New or replacement installations or work not otherwise eligible for Category 1. 2. <1 acre temporary or permanent fill, excavation and/or secondary impacts (e.g., areas drained, flooded, fragmented or mechanically cleared). Fill area includes all temporary and permanent waterway fills, provided: • Temporary or permanent fill in eelgrass[14] <1000 SF. • Permanent fill in SAS (excluding eelgrass[14]) <4300 SF. 3. Particularly relevant is GC12

	Squaw Point) on Cape Jellison in Stockton Springs or in tidal	
10. Linear Transportation Projects **(Not Including Stream Crossings)**	Not eligible	<1 acre temporary or permanent fill, excavation and/or secondary impacts (e.g., areas drained, flooded, fragmented or mechanically cleared). Fill area includes all temporary and permanent waterway fills, provided: • Temporary or permanent fill in eelgrass[14] <1000 SF. • Permanent fill in SAS (excluding eelgrass[14]) <4300 SF.
11. Mining Activities	Not Eligible	Not Eligible
12. Boat Ramps and Marine Railways	1. No new impact to SAS 2. Marine railway and boat ramp work not eligible for maintenance[7] (i.e. not currently serviceable[7]) may be replaced "in-kind" with minor deviations[7] provided: • Work is in the intertidal zone. • No fill expansion below high tide line. • Work conducted in-the-dry during low water. 3. No new boat ramps or marine railways.	1. Work not eligible for Category 1 2. <1 acre temporary or permanent fill, excavation and/or secondary impacts (e.g., areas drained, flooded, fragmented or mechanically cleared). Fill area includes all temporary and permanent waterway fills, provided: • Temporary or permanent fill in eelgrass[14] <1000 SF. • Permanent fill in SAS (excluding eelgrass[14]) <4300 SF.
13. Land and Water-Based Renewable Energy Generation Facilities and Hydropower Projects	Not Eligible	1. <1 acre temporary or permanent fill, excavation and/or secondary impacts (e.g., areas drained, flooded, fragmented or mechanically cleared). Fill area includes all temporary and permanent waterway fills, provided: • Temporary or permanent fill in eelgrass[14] <1000 SF. • Permanent fill in SAS (excluding eelgrass[14]) <4300 SF. 2. No new impoundments.
14. Reshaping Existing Drainage Ditches and Mosquito Management	1. ≤500 linear feet of drainage ditch will be modified. The reshaping of the ditch cannot increase drainage capacity beyond the original as-built capacity nor can it expand the area drained by the ditch as originally constructed (i.e., the capacity of the ditch must be the same as originally constructed and it cannot drain additional wetlands or other waters of the U.S.). 2. No new ditches or relocation of drainage ditches constructed in waters of the U.S.; the location of the centerline of the reshaped drainage ditch must be approximately the same as the location of the centerline of the original drainage ditch. 3. No effect on federally listed endangered or threatened species or critical habitat	1. Work not eligible for Category 1 2. <1 acre temporary or permanent fill, excavation and/or secondary impacts (e.g., areas drained, flooded, fragmented or mechanically cleared). Fill area includes all temporary and permanent waterway fills, provided: • Temporary or permanent fill in eelgrass[14] <1000 SF. • Permanent fill in SAS (excluding eelgrass[14]) <4300 SF.

15. Oil Spill and Hazardous Material Cleanup	Jurisdictional activities required for the containment and cleanup of oil and hazardous substances that are subject to the National Oil and Hazardous Substances Pollution Contingency Plan (40 CFR 300) provided that the work is done in accordance with the Spill Control and Countermeasure Plan required by 40 CFR 112.3 and any existing state contingency plan and provided that the Regional Response Team (if one exists in the area) concurs with the proposed containment and cleanup action. SAS[3] must typically be restored in place at the same elevation. ***Note: SVNF or a surrogate state reporting form may be submitted after the fact. No SVNF is required for Category 1eligible containment booms.***	Work not eligible for Category 1
16. Cleanup of Hazardous and Toxic Waste	Not eligible - except for booms placed for hazardous and toxic waste containment and absorption and prevention which are eligible for SV. ***Note: No SVNF is required for Category 1 eligible containment booms.***	Specific jurisdictional activities with impacts of any area required to affect the containment, stabilization, or removal of hazardous or toxic waste materials that are performed, ordered, or sponsored by a government agency with established legal or regulatory authority. Wetlands and other SAS must typically be restored in place at the same elevation to qualify.
17. Scientific Measurement Devices	Scientific measurement devices whose purpose is to measure and record scientific data, such as staff gages, water recording devices, water quality testing and improvement devices, and similar structures. Structures may not restrict or concentrate movement of aquatic organisms; no activity results in a hazard to navigation; and no activity requiring underwater blasting.	1. Work not eligible for Category 1 2. <1 acre temporary or permanent fill, excavation and/or secondary impacts (e.g., areas drained, flooded, fragmented or mechanically cleared). Fill area includes all temporary and permanent waterway fills, provided: • Temporary or permanent fill in eelgrass[14] <1000 SF. • Permanent fill in SAS (excluding eelgrass[14]) <4300 SF.
18. Survey Activities	Jurisdictional survey activities such as exploratory drilling, surveying and sampling activities, excluding any biological sampling devices. Does not include any activity requiring underwater blasting, seismic exploratory operations, or oil and gas exploration and fill for roads or construction pads. No activity may result in a hazard to navigation.	1. Work not eligible for Category 1 2. <1 acre temporary or permanent fill, excavation and/or secondary impacts (e.g., areas drained, flooded, fragmented or mechanically cleared). Fill area includes all temporary and permanent waterway fills, provided: • Temporary or permanent fill in eelgrass[14] <1000 SF. • Permanent fill in SAS (excluding eelgrass[14]) <4300 SF.
19. Agricultural Activities	Not Eligible	Not Eligible

20. Fish & Wildlife Harvesting, Enhancement and Attraction Devices and Activities (Not Aquaculture)	Fish and wildlife harvesting, enhancement, and attraction devices and activities such as pound nets, crab traps, crab dredging, eel pots, lobster traps, and clam and oyster digging, and small fish attraction devices such as open water fish concentrators (sea kites, etc.). This does not authorize artificial reefs or impoundments and semi-impoundments of waters of the U.S. for the culture or holding of motile species such as lobster, or the use of covered oyster trays or clam racks. No activity that may result in a hazard to navigation. ***Note: A SVNF is not required for these Category 1 eligible devices and activities.***	1. Work not eligible for Category 1. 2. Impoundments or semi-impoundments of waters of the U.S. for the culture or holding of motile species such as lobster and new fish weirs with an impounded area $\leq$ ½ acre. For Aquaculture operations, refer to Activity 24.
21. Habitat Restoration, Establishment and Enhancement Activities	1. Cultch placement in tidal waters is eligible for SV provided there are no salt marsh or vegetated shallow impacts. 2. SAS planting and transplanting $\leq$100 SF in tidal waters; 3. No artificial or living reefs. 4. The activity is authorized in writing by a local, state, or non-Corps federal environmental agency. Water impoundments require PCN. 5. No conversion of i) a stream to wetland or vice versa, wetland to a pond or uplands, and ii) one wetland type to another. 6. No dam removal. 7. Shellfish habitat enhancement such as brushing the flats is eligible for Category 1, *but not the use of netting which requires Category 2 review.*	1. Work not eligible for Category 1. 2. Aquatic habitat restoration, establishment and enhancement provided those activities are proactive and result in net increases in aquatic resource functions and services.[8]
22. Previously Authorized Activities	Any work not commenced nor completed that was authorized in a written letter from the Corps under the GP in effect between October 12, 2010 and October 12, 2015. The terms and general conditions of this GP apply along with any special conditions in the written authorization.	
23. Stream & Wetland Crossings	Not Eligible	All temporary or permanent crossings of tidal navigable waters or adjacent tidal wetlands not eligible as maintenance require a PCN. GC 45 applies
24. Aquaculture	Not Eligible	Shellfish & finfish aquaculture (with the exception of Atlantic salmon and any other salmonid, or other federally listed endangered or threatened species), or other aquaculture facilities with no more than minimal individual and cumulative impacts to environmental resources or navigation. This is inclusive but not limited to cages, nets, bags, racks, long lines, fences, posts, poles, predator screening, etc. Aquaculture guidelines are provided at: www.maine.gov/dmr/aquaculture/index.htm.

Endnotes/Definitions

[1] **Bordering and Contiguous Wetlands:** A bordering wetland is immediately next to its adjacent waterbody and may lie at, or below, the ordinary high water mark (mean high water in navigable waters) of that waterbody and is directly influenced by its hydrologic regime. Contiguous wetlands extend landward from their adjacent waterbody to a point where a natural or manmade discontinuity exists. Contiguous wetlands include bordering wetlands as well as wetlands that are situated immediately above the ordinary high water mark and above the normal hydrologic influence of their adjacent waterbody. Note, with respect to the federally designated navigable rivers, the wetlands bordering and contiguous to the tidally influenced portions of those rivers are reviewed under "II. Navigable Waters."

[2] **Direct, Secondary, and Cumulative Impacts/Effects:**

Direct Impacts: The immediate loss of aquatic ecosystem within the footprint of the fill.

Secondary Impacts: These are effects on an aquatic ecosystem that are associated with a discharge of dredged or fill materials, but do not result from the actual placement of the dredged or fill material. Information about secondary effects on aquatic ecosystems shall be considered prior to the time final section 404 action is taken by permitting authorities. Some examples of secondary effects on an aquatic ecosystem are a) fluctuating water levels in all impoundment and downstream associated with the operation of a dam, b) septic tank leaching and surface runoff from residential or commercial developments on fill, and c) leachate and runoff from a sanitary landfill located in waters of the U.S. Put another way, secondary effects are those impacts outside the footprint of the fill that arise from and are associated with the discharge of dredged or fill material, including the operation of an activity or facility associated with the discharge. Examples may include habitat fragmentation; interruption of travel corridors for wildlife (for example, for amphibians that migrate to and from seasonal or vernal pools used as breeding habitat); hydrologic regime changes; and impacts from operation and maintenance activities for constructed facilities; such as noise/lighting, storm water runoff, and road kill of wetland dependent wildlife. Using the directions contained in the guidelines, we consider the circumstances of a proposed discharge and the project of which it is a part to evaluate the scope, extent, severity, and permanence of direct, secondary, and cumulative adverse effects upon the aquatic ecosystem.

Cumulative Impacts: The extent of past, present, and foreseeable developments in the area may be an important consideration in evaluating the significance of a particular project's impacts. Although the impacts associated with a particular discharge may be minor, the cumulative effect of numerous similar discharges can result in a large impact. Cumulative impacts should be estimated only to the extent that they are reasonable and practical.

[3] **Special Aquatic Sites:** Includes wetlands and saltmarsh, mudflats, riffles and pools, and vegetated shallows (predominantly comprised of eelgrass in Maine).

[4] **Construction Mats:** Constructions, swamp and timber mats (herein referred to as "construction mats") are generic terms used to describe structures that distribute equipment weight to prevent wetland damage while facilitating passage and providing work platforms for workers and equipment. They are comprised of sheets or mats made from a variety of materials in various sizes. A timber mat consists of large timbers bolted or cabled together. Corduroy roads, which are not considered to be construction mats, are cut trees and/or saplings with the crowns and branches removed, and the trunks lined up next to one another. Corduroy roads are typically installed as permanent structures. Like construction mats, they are considered as fill whether they're installed temporarily or permanently.

[5] **Vernal Pools:** A vernal pool, also referred to as a seasonal forest pool, is a temporary to semi-permanent body of water occurring in a shallow depression that typically fills during the spring or fall and may dry during the summer. Vernal pools have no permanent inlet or outlet and no viable populations of predatory fish. A vernal pool may provide the primary breeding habitat for wood frogs (*Rana sylvatica*), spotted salamanders (*Ambystoma maculatum*), blue-spotted salamanders (*Ambystoma laterale*), and fairy shrimp (*Eubranchipus* sp.), as well as valuable habitat for other plants and wildlife, including several rare, threatened, and endangered species. A vernal pool intentionally created for the purposes of compensatory mitigation is included in this definition. For the purposes of this GP, the presence of any of the following species in any life stage in any abundance level/quantity would designate the waterbody as a vernal pool: fairy shrimp, blue spotted salamanders, spotted salamanders or wood frogs. The Corps may determine during a Category 2 review that a waterbody should not be regulated as a VP based on available evidence. For the purposes of this GP, the VP Management Areas are the: Vernal Pool Depression (includes the vernal pool depression up to the spring or fall high water mark, and includes any vegetation growing within the depression), Vernal Pool Envelope (area within 100 FT of the VP Depression's edge) and Critical Terrestrial Habitat (area within 100-750 FT of the Vernal Pool Depression's edge). [*Note: Critical Terrestrial Habitat is defined as 100 -750 FT on page 243 of the document "Science and Conservation of Vernal Pools in Northeastern North America," Calhoun and deMaynadier, 2008, which is referenced in Appendix G, page 3, Paragraph 10(b).

[6] **Water Diversions:** Water diversions are activities such as bypass pumping or water withdrawals. Temporary flume pipes, culverts or cofferdams where normal flows are maintained within the stream boundary's confines aren't water diversions. "Normal flows" are defined as no change in flow from pre-project conditions.
[7] **Maintenance: a)** The repair, rehabilitation, or replacement of any previously authorized, currently serviceable structure or fill, or of any currently serviceable structure or fill authorized by 33 CFR 330.3 – "Activities occurring before certain dates," provided that the structure or fill is not to be put to uses differing from those uses specified or contemplated for it in the original permit or the most recently authorized modification.

- Minor deviations in the structure's configuration or filled area, including those due to changes in materials, construction techniques, or current construction codes or safety standards that are necessary to make repair, rehabilitation, or replacement are authorized.
- Currently serviceable means useable as is or with some maintenance, but not so degraded as to essentially require reconstruction.
- No seaward expansion for bulkheads or any other fill activity is considered Category 1 maintenance.
- Only structures or fills that were previously authorized and are in compliance with the terms and condition of the original authorization can be maintained as a non-regulated activity under 33 CFR 323.4(a)(2), or in accordance with the Category 1 or 2 thresholds in Appendix A.

b) The state's maintenance provisions may differ from the Corps and may require reporting and written authorization from the state.
c) Contact the Corps to determine whether stream crossing replacements require a written application to the Corps for at least a Category 2 review.
d) Exempted Maintenance. In accordance with 33 CFR 323.4(a)(2), any discharge of dredged or fill material that may result from any of the following activities is not prohibited by or otherwise subject to regulation under Section 404 of the CWA: "Maintenance, including emergency reconstruction of recently damaged parts, of currently serviceable structures such as dikes, dams, levees, groins, riprap, breakwaters, causeways, bridge abutments or approaches, and transportation structures. Maintenance does not include any modification that changes the character, scope, or size of the original fill design."
[8] **Aquatic Habitat Restoration, Establishment and Enhancement:** The Corps will decide if a project qualifies and must determine in consultation with federal and state agencies that the net effects are beneficial. The Corps may refer to Nationwide Permit 27 published in the 3/12/07 Federal Register. Activities authorized here may include, but are not limited to: the removal of accumulated sediments; the installation, removal, and maintenance of small water control structures, dikes, and berms; the installation of current deflectors; the enhancement, restoration, or establishment of riffle and pool stream structure; the placement of in-stream habitat structures; modifications of the stream bed and/or banks to restore or establish stream meanders; the backfilling of artificial channels and drainage ditches; the removal of existing drainage structures; the construction of small nesting islands in inland waters; the construction of open water areas; the construction of native shellfish species habitat over unvegetated bottom for the purpose of habitat protection or restoration in tidal waters; shellfish seeding; activities needed to reestablish vegetation, including plowing or discing for seed bed preparation and the planting of appropriate wetland species; mechanized land clearing to remove non-native invasive, exotic, or nuisance vegetation; and other related activities. Only native plant species should be planted at the site.
[9] **Brushing the Flats:** The placement of tree boughs, wooden lath structure, or small-mesh fencing on mudflats to enhance recruitment of soft-shell clams (*Mya arenaria*).
[10] **Maintenance Dredging:** This includes only those areas and depths previously authorized by the Corps and dredged. The Corps may require proof of authorization. Maintenance dredging typically refers to the routine removal of sediment to maintain the design depths of serviceable navigation channels, harbors, basins, marinas, boat launches, and port facilities. Maintenance dredging is conducted for navigational purposes and does not include any expansion of the previously dredged area or depth. The Corps may review a maintenance dredging activity as new dredging if sufficient time has elapsed to allow for the colonization of SAS, shellfish, etc.
[11] **Boating Facilities:** Facilities that provide for a fee, rent, or sell mooring space, such as marinas, yacht clubs, boat clubs, boat yards, town facilities, dockominiums, etc.
[12] **Federal Navigation Projects (FNPs):** FNPs are comprised of Federal Channels and Federal Anchorages. See Appendix F for their location and contact the Corps for more information. "Horizontal Limits" is the outer edge of an FNP. "Buffer Zone" is equal to three times the authorized depth of that channel.
[13] **Horizontal Limits:** The outer edge of a Federal Navigation Project (FNP). See Appendix F and contact the Corps for information on FNP's.
[14] **Eelgrass (Zostera marina):** A type of rooted aquatic vegetation that exists in intertidal and shallow subtidal areas known as vegetated shallows. See www.nero.noaa.gov/hcd/ for eelgrass survey guidance. Note: Eelgrass surveys should be conducted be conducted between May and October unless otherwise directed.

[15] **Structures:** The height of structures shall at all points be equal to or exceed the width of the deck. For the purpose of this definition, height shall be measured from the marsh substrate to the bottom of the longitudinal support beam.

[16] **Agricultural Activities:** The Clean Water Act exempts certain discharges associated with normal farming, ranching, and forestry activities such as plowing, cultivating, minor drainage, and harvesting for the production of food, fiber, and forest products, or upland soil and water conservation practices (Section 404(f)(1)(A)). Applicants are strongly advised to contact the Corps for a determination of whether their activity is exempt or requires a permit.

US Army Corps of Engineers®
New England District

Appendix B: Self-Verification Notification Form

(for all tidal and non-tidal projects in Maine subject to Corps jurisdiction)

At least two weeks before work commences, complete **all** fields (write "none" if applicable) below or use the fillable form at www.nae.usace.army.mil/missions/regulatory.aspx. Send this form, a location map, any project plans, and an Official Species List (See GC 8) to the address noted below; fax to (207) 623-8206; or email to jay.l.clement@usace.army.mil. The two-week lead time is not required for emergency situations (see page 4 for definition). Please call (207) 623-8367 with questions.

Maine Project Office
U.S. Army Corps of Engineers
New England District
675 Western Avenue #3
Manchester, Maine 04351

State Permit Number: _____
Date of State Permit: _____
State Project Manager: _____

Permittee: _____
Address, City, State & Zip: _____
Phone(s) and Email: _____

Contractor: _____
Address, City, State & Zip: _____
Phone(s) and Email: _____

Consultant/Engineer/Designer: _____
Address, City, State & Zip: _____
Phone(s) and Email: _____

Wetland/Vernal Pool Consultant: _____
Address, City, State & Zip: _____
Phone(s) and Email: _____

Project Location/Description: _____
Address, City, State & Zip: _____
Latitude/Longitude Coordinates: _____ Tax Map/Lot: _____
Waterway Name: _____
Work Description: _____
_____
Provide any prior Corps permit numbers: _____
Proposed Work Dates: Start: _____ Finish: _____

Area of wetland impact: _____ SF (leave blank if work involves structures & no fill in Navigable Waters)
Area of waterway impact: _____ SF (leave blank if work involves structures & no fill in Navigable Waters)
Area of compensatory mitigation provided: _____ SF

Work will be done under the following Appendix A categories (circle all that apply):

I. Inland Waters and wetlands: 1 2 3 4 5 6 7 8 9 10 11 12 13 14 15 16 17 18 19 20 21 22 23 24
II. Navigable Waters: 1 2 3 4 5 6 7 8 9 10 11 12 13 14 15 16 17 18 19 20 21 22 23 24

Your name/signature below, as permittee, indicates that you accept and agree to comply with the terms, eligibility criteria, and general conditions of Category 1 of the Maine General Permit.

Permittee Printed Name: _____

Permittee Signature: _____ Date: _____

US Army Corps
of Engineers ®
New England District

Appendix C: Content of Pre-Construction Notification

In addition to the following required information, the applicant must provide additional information as the Corps deems essential to make a public interest determination including, where applicable, a determination of compliance with the Section 404(b)(1) guidelines or ocean dumping criteria. Such additional information may include environmental data and information on alternate methods and sites as may be necessary for the preparation of the required environmental documentation. For a more comprehensive checklist, go to www.nae.usace.army.mil/missions/regulatory >> Forms >> Application and Plan Guideline Checklist. Please check with the Corps for project-specific requirements.

Information required for all projects:

- ☐ Corps application form (ENG Form 4345) or appropriate state application form (see Appendix E). Forms may need to be supplemented to include the information noted below.
- ☐ Proof of notification to the SHPO and the appropriate THPOs (see Appendix E).
- ☐ Official Species List for any federally listed endangered or threatened species (Instructions at Appendix D)
- ☐ Drawings, sketches, or plans (detailed engineering plans and specifications are not required) that are legible, reproducible (color is encouraged, but features must be distinguishable in black and white), no larger than 11"x17", with bar scale. Wetland area impact sheets should have the highest resolution possible to show work within Corps jurisdiction (do not just reduce project overview or cut large-scale plan into quadrant sheets). Provide locus map and a plan overview of the entire property with a key index to the individual impact sheets. A locus map be on a section of color USGS topographic map is encouraged. Digital submissions are encouraged.
- ☐ Include:
  - ☐ All direct, secondary, permanent and temporary effects the project would cause, including the anticipated amount of impacts to waters of the U.S. expected to result from the activity, in acres, linear feet, or other appropriate unit of measure.
  - ☐ Any historic permanent fill associated with each single and complete project.
  - ☐ Cross-section views of all wetland and waterway fill areas and wetland replication areas.
  - ☐ Delineation of all wetlands, other special aquatic sites (vegetated shallows, saltmarsh, mudflats, riffles and pools, coral reefs, and sanctuaries and refuges), and other waters, such as lakes and ponds, and perennial, intermittent, and ephemeral streams, on the project site. Use Federal delineation methods and include Corps wetland delineation data sheets (see GC 2).
  - ☐ MLW and MHW elevations in tidal waters. Show the HTL elevations when fill is involved. Show OHW elevation in lakes and non-tidal streams.
  - ☐ Existing and proposed conditions.
  - ☐ For vegetated shallow and eelgrass survey guidance, see www.nae.usace.army.mil/missions/regulatory >> Jurisdictional Limits and Wetlands >> Submerged Aquatic Vegetation Survey Guidance for the New England Region.
  - ☐ Show all known VPs on the project site. See GC 23 for vernal pool identification requirements.
- ☐ Volume, type, and source of fill material to be discharged into waters and wetlands, including the area(s) (in square feet or acres) of fill in wetlands, below OHW in inland waters and below the HTL in coastal waters.

- ☐ An Official Species List of federally "listed species or critical habitat" present in the action area (see GC 8).
- ☐ A restoration plan showing how all temporary fills and structures will be removed and the area restored to pre-project conditions (see GC 43).

Information that may be required:

- ☐ Photographs of wetland/waterway to be impacted. Photos at low tide are preferred for work in tidal waters.
- ☐ For drawings, sketches, or plans:
  - ☐ The vertical datum for all coastal projects must be in U.S. survey feet and referenced to MLLW and current tidal epochs, with a reference chart showing conversion factor to NAVD88; do not use local datum. See www.nae.usace.army.mil/missions/regulatory >> Forms and Publications >>Vertical Datum - FEMA (Jul 2007);
  - ☐ The horizontal state plane coordinates shall be in U.S. survey feet and based on the appropriate state plane coordinate system.
- ☐ For the construction of a filled area or pile or float-supported platform, the use of, and specific structures to be erected on, the fill or platform.
- ☐ For the discharge of dredged or fill material into waters of the U.S. or the transportation of dredged material for the purpose of disposing of it in ocean waters, the source of the material; the purpose of the discharge, a description of the type, composition and quantity of the material; the method of transportation and disposal of the material; and the location of the disposal site.
- ☐ For the discharge of dredged or fill material into waters of the U.S., include a statement describing how impacts to waters of the U.S. are to be avoided and minimized. Include either a statement describing how impacts to waters of the U.S. are to be compensated for or a statement explaining why compensatory mitigation should not be required for the proposed impacts.
- ☐ Purpose and need for the proposed activity;
- ☐ Limits and coordinates of any Federal Navigation Project in the vicinity of the project area.
- ☐ Limits and coordinates of any proposed mooring field, reconfiguration zone or aquaculture activity. Provide coordinates for all corners;
- ☐ Schedule of construction/activity;
- ☐ Names and addresses of adjoining property owners;
- ☐ Location and dimensions of adjacent structures;
- ☐ List of authorizations required by other Federal, interstate, state, or local agencies for the work, including all approvals received or denials already made.
- ☐ Identification and description of potential impacts to Essential Fish Habitat (defined at VI. Definitions and Acronyms.
- ☐ Identification of potential discharges of pollutants to waters, including potential impacts to impaired waters, in the project area (see GC 19).
- ☐ Invasive Species Control Plan (see GC 24). For sample control plans, see www.nae.usace.army.mil/missions/regulatory >> Invasive Species.
- ☐ Wildlife Action Plan (WAP) maps. Contact Maine Inland Fisheries & Wildlife (Appendix E) or on line at http://www.maine.gov/ifw/wildlife/conservation/action_plan.html

Information for dredging projects that may be required:

- ☐ Sediment testing, including physical (e.g., grain-size analysis), chemical and biological testing. For projects proposing open water disposal, applicants are encouraged to contact the Corps as early as possible regarding sampling and testing protocols. Sampling and testing of sediments without such contact should not occur and if done, would be at the applicant's risk.
- ☐ The area in square feet and volume of material to be dredged below mean high water.

- ☐ Existing and proposed water depths.
- ☐ Type of dredging equipment to be used.
- ☐ Nature of material (e.g., silty sand).
- ☐ Any existing sediment grain size and bulk sediment chemistry data for the proposed or any nearby projects.
- ☐ Information on the location and nature of municipal or industrial discharges and occurrence of any contaminant spills in or near the project area.
- ☐ Shellfish survey.
- ☐ Location of the disposal site (include locus sheet).
- ☐ Identification and description of any potential impacts to Essential Fish Habitat.
- ☐ Delineation of submerged aquatic vegetation (e.g., eelgrass beds).

Information for aquaculture projects that may be required:

- ☐ Maine Aquaculture guidelines and joint Corps/Maine DMR applications may be found at: www.maine.gov/dmr/aquaculture/index.htm.
- ☐ In addition to the information required above, applications must also include:
  - ☐ Whether canopy predator nets are being used.

Appendix D: Instruction for USFWS IPaC Project Builder/Official Species List

NOTE: These instructions are subject to change by the USFWS. Users should check this GP's Corps webpage for the latest instructions or click here.

In your internet browser go to http://ecos.fws.gov/ipac/

1. Click on get started.

2. Click on enter project location.

3. Search or zoom to your project location. (You can enter an address and then zoom in with your mouse).

4. Define your area. (Select the polygon tool and click around the boundary of your project.) or (Use the draw a line tool for linear projects)

Note: You can change/select the map from Streets to Satellite or Topo in the lower left corner of the map.
5. Click finished drawing then click confirm and select continue.

6. On the next page under Tasks (lower left), select Request an official species list. The pane will open. Select "request official species list" again.

7. A new page will open. Fill in the project information blanks with the project name, brief description, project type, lead agency, and contact information. Be sure to check the box to verify this is a legitimate project. Click on Submit Official Species List Request.

8. You will be sent an e-mail with instructions to complete the request by clicking on the link provided.

9. The site will open Official Species List Request Completed. Under the Maine Ecological Services Field Office address you will see "Official Species List Document". Click on that link and your document will open. Save and or print a copy and **include the entire report with your application**.

Note, you will receive a second e-mail with the same information. You can save the link in the event you need to return to the IPaC site for an updated list.

If a period of time has passed since your initial "Official Species List" identifier number was generated, you may choose to generate an "UPDATED SPECIES LIST". To do this, return to the IPaC homepage at http://ecos.fws.gov/ipac site. In the middle of the page, click the purple "Need an updated species list" link.

On the request an "Updated Official Species List" page, complete the information in the boxes provided. You will need the project specific official consultation code generated and stated on the original official list as well as the email address entered with the original submission.

Click "Request Updated Species List". Print, or save.

Appendix E: Contacts and Tribal Areas of Interest

1. Federal

U.S. Army Corps of Engineers
Maine Project Office
675 Western Avenue #3
Manchester, ME 04351
(207) 623-8367 (phone); (207) 623-8206 (fax)

U.S. Environmental Protection Agency
5 Post Office Square
Suite 100 (OEP05–2)
Boston, MA 02109-3912
(617) 918-1589 (phone)

U.S. Fish and Wildlife Service
Maine Field Office
17 Godfrey Drive, Suite 2
Orono, ME 04473
(207) 866-3344 (phone); (207) 866-3351 (fax)
(Federal endangered species)

National Marine Fisheries Service
Maine Field Office
17 Godfrey Drive Suite 1
Orono, ME 04473
(207) 866-7379 (phone); (207) 866-7342 (fax)
(Federal endangered species)

Federal Emergency Management Agency
99 High St.
Boston, MA 02110
(877) 336-2734 (phone)
(Flood Plain Management)

National Marine Fisheries Service
55 Great Republic Drive
Gloucester, MA 01930
(978) 281-9102 (phone); (978) 281-9301 (fax)
(Federal endangered species & EFH)

National Park Service
North Atlantic Region
15 State Street
Boston, MA 02109
(617) 223-5203 (phone)
(Wild and Scenic Rivers)

Commander (dpb)
First Coast Guard District
One South Street - Battery Bldg
New York, NY 10004-1466
(212) 668-7021 (phone); (212) 668-7967 (fax)
(bridge permits)

2. State of Maine

a. Department of Environmental Protection (*State permits & Water Quality Certifications*)

Division of Land Resource Regulation
Bureau of Land and Water Quality
17 State House Station
Augusta, Maine 04333
(207) 287-7688 (phone)

Southern Maine Regional Office
312 Canco Road
Portland, Maine 04103
(201) 822-6300 (phone)

Eastern Maine Regional Office
106 Hogan Road
Bangor, Maine 04401
(207) 941-4570 (phone)

Northern Maine Regional Office
1235 Central Drive - Skyway Park
Presque Isle, Maine 04769
(207) 764-0477 (phone)

b. Department of Agriculture, Conservation and Forestry

i. Maine Land Use Planning Commission (LUPC) (*State permits & Water Quality Certifications in the unorganized areas of the State*)

Augusta Office
22 State House Station
Augusta, Maine 04333-0022
(207) 287-2631 (phone); (207) 287-7439 (fax)

Greenville Regional Office
43 Lakeview Drive
P.O. Box 1107
Greenville, Maine 04441
(207) 695-2466 (phone); (207) 695-2380 (fax)

Rangeley Regional Office
133 Fyfe Road
PO Box 307
West Farmington, ME 04992
(207) 670-7493 (phone); (207) 287-7439 (fax)

Downeast Regional Office
106 Hogan Rd, Suite 8
Dorothea Dix Complex
Bangor, Maine 04401
(207) 941-4052 (phone); (207) 941-4222 (fax)

Ashland Regional Office
45 Radar Road
Ashland, ME 04732-3600
(207) 435-7963 (phone); (207) 435-7184 (fax)

East Millinocket Regional Office
191 Main Street
East Millinocket, ME 04430
(207) 746-2244 (phone); (207) 746-2243 (fax)

ii. Maine Coastal Program

Department of Agriculture, Conservation and Forestry
Bureau of Resource Information and Land Use Planning
17 Elkins Lane {physical address}
State House Station 93
Augusta, Maine 04333-0038
(207) 287-2801 (phone); (207) 287-2353 (fax)
(CZM consistency determinations)

iii. Division of Parks and Public Lands

22 State House Station
Augusta, Maine 04333
(207) 287-3061 (phone); (207) 287-6170 (fax)
(submerged lands leases)

c. Department of Marine Resources

P.O. Box 8
West Boothbay Harbor, Maine 04575
(207) 633-9500 (phone); (207) 624-6024 (fax)
(aquaculture leases)

3. Historic Properties

a. State Historic Preservation Officer (SHPO)

Mr. Kirk F. Mohney, Director

Maine Historic Preservation Commission (MHPC)
65 State House Station
Augusta, Maine 04333-0065
(207) 287-2132 (phone); (207) 287-2335 (fax)
Area of concern: The entire State of Maine

b. Tribal Historic Preservation Officers (THPOs)

Note: The area of concern for each tribe is the entire State of Maine

THPO & Environmental Planner
Houlton Band of Maliseet Indians
88 Bell Road
Littleton, Maine 04730
(207) 532-4273, x215 (phone)
(207) 532-6883 (fax)
envplanner@maliseets.com
ogs1@maliseets.com

THPO
Passamaquoddy Tribe of Indians
Pleasant Point Reservation
P.O. Box 343
Perry, Maine 04667
(207) 853-2600 (phone); (207) 853-6039 (fax)
soctomah@gmail.com

THPO
Passamaquoddy Tribe of Indians
Indian Township Reservation
P.O. Box 301
Princeton, Maine 04668
(207) 796-2301 (phone)
(207) 796-5256 (fax); soctomah@gmail.com

THPO
Aroostook Band of Micmacs
7 Northern Road
Presque Isle, Maine 04769
(207) 764-1972 (phone); (207) 764-7667 (fax)
jpictou@mimca-nsn.gov

THPO
Penobscot Nation
Cultural and Historic Preservation Dept.
12 Wabanaki Way
Indian Island, Maine 04468
(207) 817-7471 (phone)
chris.sockalexis@penobscotnation.org

4. Organizational Websites (Note – Subject to Change):

U.S. Army Corps of Engineers, N.E. District	www.nae.usace.army.mil/missions/regulatory.aspx
U.S. Army Corps of Engineers, Headquarters	See above link>>Useful Links>>Federal Agency Links
U.S. Environmental Protection Agency	www.epa.gov/owow/wetlands
National Marine Fisheries Service	www.nmfs.noaa.gov
U.S. Fish and Wildlife Service	www.fws.gov/mainefieldoffice
National Park Service	www.nps.gov/rivers/index.html
Maine Department of Environmental Protection	www.maine.gov/dep
Maine Department of Agriculture, Conservation and Forestry	www.maine.gov/acf/index.shtml
Maine Land Use Planning Commission	www.maine.gov/doc/lupc/commission/offices.shtml
Maine Department of Marine Resources	www.maine.gov/dmr/index.htm
State of Maine - Aquaculture Guidelines	www.maine.gov/dmr/aquaculture/index.htm

Appendix F: Definitions

Definitions

Attendant Features: Occurring with or as a result of; accompanying.

Biodegradable: A material that decomposes into elements found in nature within a reasonably short period of time and will not leave a residue of plastic or a petroleum derivative in the environment after degradation. Examples of biodegradable materials include jute, sisal, cotton, straw, burlap, coconut husk fiber (coir) or excelsior. In contrast, degradable plastics break down into plastic fragments that remain in the environment after degradation.

Boating facilities: These provide, rent or sell mooring space, such as marinas, yacht clubs, boat yards, dockominiums, town facilities, land/home owners, etc. Not classified as boating facilities are piers shared between two abutting properties or town mooring fields that charge an equitable user fee based on the actual costs incurred.

Brushing the Flats: The placement of tree boughs, wooden lath structure, or small-mesh fencing on mudflats, or any bottom disturbance (e.g., discing, plowing, raking, etc.), to enhance recruitment of shellfish.

Buffer Zone: The buffer zone of an FNP is equal to three times the authorized depth of the FNP.

Construction mats: Constructions, swamp and timber mats (herein referred to as "construction mats") are generic terms used to describe structures that distribute equipment weight to prevent wetland damage while facilitating passage and providing work platforms for workers and equipment. They are comprised of sheets or mats made from a variety of materials in various sizes. A timber mat consists of large timbers bolted or cabled together. Corduroy roads, which are not considered to be construction mats, are cut trees and/or saplings with the crowns and branches removed, and the trunks lined up next to one another. Corduroy roads are typically installed as permanent structures. Like construction mats, they are considered as fill whether they are installed temporarily or permanently

Cumulative effects: See "Direct, secondary, and cumulative effects."

Direct, secondary, and cumulative effects:

Direct Effects: The loss of aquatic ecosystem within the footprint of the discharge of dredged or fill material. Direct effects are caused by the action and occur at the same time and place.

Secondary Effects: These are effects on an aquatic ecosystem that are associated with a discharge of dredged or fill materials, but do not result from the actual placement of the dredged or fill material. Information about secondary effects on aquatic ecosystems shall be considered prior to the time final Section 404 action is taken by permitting authorities. Some examples of secondary effects on an aquatic ecosystem are a) aquatic areas drained, flooded, fragmented, or mechanically cleared, b) fluctuating water levels in all impoundment and downstream associated with the operation of a dam, c) septic tank leaching and surface runoff from residential or commercial developments on fill, and d) leachate and runoff from a sanitary landfill located in waters of the U.S. See 40 CFR 230.11(h).

Cumulative Effects: The changes in an aquatic ecosystem that are attributable to the collective effect of a number of individual 1) discharges of dredged or fill material, or 2) structures. Although the impact of a particular discharge may constitute a minor change in itself, the cumulative effect of numerous such piecemeal changes can result in a major impairment of the water resources and interfere with the productivity and water quality of existing aquatic ecosystems. See 40 CFR 230(g).

Dredging:

Maintenance Dredging: Includes areas and depths previously authorized by the Corps and dredged. The Corps may require proof of authorization. Maintenance dredging typically refers to the routine removal of accumulated sediment from channel beds to maintain the design depths of navigation channels, harbors, marinas, boat launches and port facilities. Routine maintenance dredging is conducted regularly for navigational purposes (typically at least once every ten years) and does not include any expansion of the previously dredged area or depth. The Corps may review a maintenance dredging activity as new dredging if sufficient time has elapsed to allow for the colonization of SAS,

shellfish, etc. The main characteristics of maintenance dredging projects are variable quantities of material; soft, uncompacted soil; contaminant content possible; thin layers of material;occurring in navigation channels and harbors; repetitive activity

New Dredging: Dredging of an area or to a depth that has never been authorized by the Corps or dredged.

Dredged material & discharge of dredged material: These are defined at 323.2(c) and (d). The term dredged material means material that is excavated or dredged from waters of the U.S.

Essential Fish Habitat (EFH): This is broadly defined to include those waters and substrate necessary to fish for spawning, breeding, feeding, or growth to maturity.

Fill material & discharge of fill material: These are defined at 323.2(e) and (f). The term fill material is defined as material placed in waters of the U.S. where the material has the effect of either replacing any portion of a water of the U.S. with dry land or changing the bottom elevation of any portion of a water of the U.S.

Federal anchorages, Federal channels and Federal turning basin: Refer to Appendix H for those in Maine

Federal navigation projects (FNPs): These areas are maintained by the Corps; authorized, constructed and maintained on the premise that they will be accessible and available to all on equal terms; and are comprised of Federal Anchorages, Federal Channels and Federal Turning Basins. The buffer zone is equal to three times the authorized depth of a FNP. More information on the following FNPs is provided at www.nae.usace.army.mil/missions/navigation.aspx >> Navigation Projects.

Flume: An open artificial water channel, in the form of a gravity chute, that leads water from a diversion dam or weir completely aside a natural flow. A flume can be used to measure the rate of flow.

Frac out: During normal drilling operations, drilling fluid travels up the borehole into a pit. When the borehole becomes obstructed or the pressure becomes too great inside the borehole, the ground fractures and fluid escapes to the surface.

Independent utility: A test to determine what constitutes a single and complete non-linear project in the Corps regulatory program. A project is considered to have independent utility if it would be constructed absent the construction of other projects in the project area. Portions of a multi-phase project that depend upon other phases of the project do not have independent utility. Phases of a project that would be constructed even if the other phases were not built can be considered as separate single and complete projects with independent utility.

Individual Permit: A Department of the Army authorization that is issued following a case-by-case evaluation of a specific structure or work in accordance with the procedures of 33 CFR 322, or a specific project involving the proposed discharge(s) in accordance with the procedures of 33 CFR 323, and in accordance with the procedures of 33 CFR 325 and a determination that the proposed discharge is in the public interest pursuant to 33 CFR 320.

Maintenance: Regulations on maintenance are provided at 33 CFR 323.4. The following definitions are applicable:

Minor deviations: Deviations in the structure's configuration or filled area, including those due to changes in materials, construction techniques, or current construction codes or safety standards, which are necessary to make repair, rehabilitation, or replacement are permitted, provided the adverse environ-mental effects resulting from such repair, rehabilitation, or replacement are minimal.

Currently serviceable: Useable as is or with some maintenance, but not so degraded as to essentially require reconstruction.

Marina reconfiguration zone: A Corps-authorized area in which permittees may rearrange pile-supported structures and floats without additional authorizations. A reconfiguration zone does not grant exclusive privileges to an area or an increase in structure or float area.

Navigable waters of the U.S.: See Waters of the U.S. below.

Overall project: See "single and complete linear project" below.

Practicable: Available and capable of being done after taking into consideration cost, existing technology, and logistics in light of overall project purposes.
Permanent impacts: Permanent impacts means waters of the U.S. that are permanently affected by filling, flooding, excavation, or drainage because of the regulated activity. Permanent impacts include permanent discharges of dredged or fill material that change an aquatic area to dry land, increase the bottom elevation of a waterbody, or change the use of a waterbody. Temporary impacts include waters of the U.S. that are temporarily filled, flooded, excavated, drained or mechanically cleared because of the regulated activity.
Pre-construction notification (PCN): A request submitted by the project proponent to the Corps for confirmation that a particular activity is authorized by this GP. The request may be a permit application, letter, or similar document that includes information about the proposed work and its anticipated environmental effects. Pre-construction notification may be required by the terms and conditions of these GPs. A PCN may be voluntarily submitted in cases where PCN is not required and the project proponent wants confirmation that the activity is authorized under this GP.
Secondary effects: See "Direct, secondary, and cumulative effects."
Single and complete linear project: A linear project is a project constructed for the purpose of getting people, goods, or services from a point of origin to a terminal point, which often involves multiple crossings of one or more waterbodies at separate and distant locations. The term "single and complete project" is defined as that portion of the total linear project proposed or accomplished by one owner/developer or partnership or other association of owners/developers that includes all crossings of a single water of the U.S. (i.e., a single waterbody) at a specific location. For linear projects crossing a single or multiple waterbodies several times at separate and distant locations, each crossing is considered a single and complete project for the purposes of this GP. However, individual channels in a braided stream or river, or individual arms of a large, irregularly shaped wetland or lake, etc., are not separate waterbodies, and crossings of such features cannot be considered separately.
The overall project, for purposes of this GP, includes all regulated activities that are reasonably related and necessary to accomplish the project purpose.
Single and complete non-linear project: For non-linear projects, the term "single and complete project" is defined at 33 CFR 330.2(i) as the total project proposed or accomplished by one owner/developer or partnership or other association of owners/developers. For non-linear projects, the single and complete project must have independent utility (see definition).
Special aquatic sites: These include inland and saltmarsh wetlands, mud flats, vegetated shallows, sanctuaries and refuges, coral reefs, and riffle and pool complexes. These are defined at 40 CFR 230 Subpart E.
Stream channelization: The manipulation of a stream's course, condition, capacity, or location that causes more than minimal interruption of normal stream processes. A channelized stream remains a water of the United States.
Temporary impacts: See permanent impacts above.
Utility line: Any pipe or pipeline for the transportation of any gaseous, liquid, liquescent, or slurry substance, for any purpose, and any cable, line, or wire for the transmission for any purpose of electrical energy, telephone, and telegraph messages, and radio and television communication. The term 'utility line' does not include activities that drain a water of the U.S., such as drainage tile or French drains, but it does apply to pipes conveying drainage from another area.
Vegetated shallows: Permanently inundated areas that under normal circumstances support communities of rooted aquatic vegetation, such as eelgrass and widgeon grass (*Rupiamaritima*) in marine systems (doesn't include salt marsh) as well as a number of freshwater species in rivers and lakes. Note: These areas are also commonly referred to as submerged aquatic vegetation (SAV).
Vernal pools (VPs): For the purposes of this GP, VPs are depressional wetland basins that typically go dry in most years and may contain inlets or outlets, typically of intermittent flow. Vernal pools range in both size and depth depending upon landscape position and parent material(s). Pools usually

support one or more of the following obligate indicator species: wood frog, spotted salamander, blue-spotted salamander, marbled salamander, Jefferson's salamander and fairy shrimp. However, they should preclude sustainable populations of predatory fish.

VP areas are:

- Depression (includes the VP depression up to the spring or fall high water mark, and includes any vegetation growing within the depression),
- Envelope (area within 100 feet of the VP depression's edge), and
- Critical terrestrial habitat (area within 100-750 feet of the VP depression's edge).

Note: See footnote to GC 23. The Corps may determine during the PCN review that a waterbody should not be designated as a VP based on available evidence.

Water diversions: Water diversions are activities such as bypass pumping (e.g., "dam and pump") or water withdrawals. Temporary flume pipes, culverts or cofferdams where normal flows are maintained within the stream boundary's confines aren't water diversions. "Normal flows" are defined as no change in flow from pre-project conditions.

Weir: A barrier across a river designed to alter the flow characteristics. In most cases, weirs take the form of a barrier, smaller than most conventional dams, across a river that causes water to pool behind the structure (not unlike a dam) and allows water to flow over the top. Weirs are commonly used to alter the flow regime of the river, prevent flooding, measure discharge and help render a river navigable.

Waters of the U.S. & Waters of the United States (U.S.): The term waters of the U.S. and all other terms relating to the geographic scope of jurisdiction are defined at 33 CFR 328. Also see Section 502(7) of the Federal CWA [33 USC 1352(7)]. Waters of the U.S. include jurisdictional wetlands. Not all waters and wetlands are jurisdictional. Contact the Corps with any questions regarding jurisdiction.

Navigable waters: Refer to 33 CFR 329. These waters include the following federally designated navigable waters in New England. This list represents only those waterbodies for which affirmative determinations have been made; absence from this list should not be taken as an indication that the waterbody is not navigable:

ME: All tidal waters; Kennebec River to Moosehead Lake; Penobscot River to the confluence of the East and West Branch at Medway, Maine; Lake Umbagog within the State of Maine.

Appendix G: Additional References

1. GC 2: Federal Jurisdictional Boundaries.
(a) Corps Wetlands Delineation Manual, regional supplements, and Corps Wetland Delineation Data Sheets: www.nae.usace.army.mil/missions/regulatory and then "Wetlands and Jurisdictional Limits."
(b) The USFWS publishes the 1988 National List of Plant Species that Occur in Wetlands (www.nwi.fws.gov).
The Natural Resources Conservation Service (NRCS) publishes the current hydric soil definition, criteria and lists: http://soils.usda.gov/use/hydric. For the Field Indicators for Identifying Hydric Soils in N.E., see www.neiwpcc.org/hydricsoils.asp.

2. GC 5: Single and Complete Project.
Single and complete project means the total project proposed or accomplished by one owner/developer or partnership or other association of owners/developers. For example, if construction of a residential development affects several different areas of a headwater or isolated water, or several different headwaters or isolated waters, the cumulative total of all filled areas should be the basis for deciding whether or not the project will be covered by Category 1 or 2.
The ***Independent utility*** test is used to determine what constitutes a single and complete project in the Corps regulatory program. A project is considered to have independent utility if it would be constructed absent the construction of other projects in the project area. Portions of a multi-phase project that depend upon other phases of the project do not have independent utility. Phases of a project that would be constructed even if the other phases were not built can be considered as separate single and complete projects with independent utility.

3. GC 8: Threatened and Endangered Species.
(a) The following NMFS site must be referenced to ensure that listed species or critical habitat are not present in the action area [GC 8(b)] or to provide information on federally-listed species or habitat [GC 8(e)]: www.nero.noaa.gov/prot_res/esp/ListE&Tspec.pdf. Contact the USFWS for information to check for the presence of listed species (see Appendix D for contact information & procedures).
(b) The Endangered Species Act Consultation Handbook – Procedures for Conducting Section 7 Consultations and Conferences, defines action area as "all areas to be affected directly or indirectly by the federal action and not merely the immediate area involved in the action. [50 CFR 402.02]."

4. GC 42: Essential Fish Habitat.
As part of the GP screening process, the Corps may coordinate with NMFS in accordance with the 1996 amendments to the Magnuson-Stevens Fishery Conservation and Management Act to protect and conserve the habitat of marine, estuarine and anadromous finfish, mollusks, and crustaceans. This habitat is termed "Essential Fish Habitat (EFH)", and is broadly defined to include "those waters and substrate necessary to fish for spawning, breeding, feeding, or growth to maturity." There are EFH waters throughout inland and coastal waters in Maine. For additional information, see the EFH regulations 50 CFR 600 at www.nero.noaa.gov/hcd including the "Guide for EFH Descriptions" at www.nero.noaa.gov/hcd/list.htm. Additional information on the location of EFH can be obtained from NMFS (see Appendix D for contact information).

5. GC 4: Avoidance, Minimization and Compensatory Mitigation.
(a) See www.nae.usace.army.mil/missions/regulatory and then "Mitigation" to view the April 10, 2008 "Final Compensatory Mitigation Rule" (33 CFR 332) and related documents. The Q&A document states: "In order to reduce risk and uncertainty and help ensure that the required compensation is provided, the rule establishes a preference hierarchy for mitigation options. The most preferred option

is mitigation bank credits, which are usually in place before the activity is permitted. In-lieu fee program credits are second in the preference hierarchy, because they may involve larger, more ecologically valuable compensatory mitigation projects as compared to permittee-responsible mitigation. Permittee-responsible mitigation is the third option, with three possible circumstances: (1) conducted under a watershed approach, (2) on-site and in kind, and (3) off-site/out-of-kind.
(b) Compensatory mitigation may take the form of wetland preservation, restoration, enhancement, creation, and/or in lieu fee (ILF) for inclusion into the Natural Resources Mitigation Fund for projects in DEP and LURC territories. Avoidance of wetland impacts will reduce the ILF dollar total for applicants. The ILF compensation program was established to provide applicants with a flexible compensation option over and above traditional permittee responsible compensation projects. See the Maine ILF Agreement at www.nae.usace.army.mil/missions/regulatory, "Mitigation" and then "Maine," or www.maine.gov/dep/blwq/docstand/nrpa/ILF_and_NRCP/index.htm.

6. GCs 24, 15, and 43: Invasive Species.
(a) Information on what are considered "invasive species" is provided in our "Compensatory Mitigation Guidance" document at www.nae.usace.army.mil/missions/regulatory under "Mitigation." The "Invasive Species" section has a reference to our "Invasive Species Control Plan (ISCP) Guidance" document, located at www.nae.usace.army.mil/missions/regulatory under "Invasive Species," which provides information on preparing an ISCP.
(b) The June 2009 "Corps of Engineers Invasive Species Policy" is at www.nae.usace.army.mil/missions/regulatory under "Invasive Species" and provides policy, goals and objectives.

7. GC 44: Bank Stabilization.
This generally eliminates bodies of water where the reflected wave energy may interfere with or impact on harbors, marinas, or other developed shore areas. A revetment is sloped and is typically employed to absorb the direct impact of waves more effectively than a vertical seawall. It typically has a less adverse effect on the beach in front of it, abutting properties and wildlife. See the Corps Coastal Engineering Manual EM 1110-2-1100 at www.nae.usace.army.mil/missions/regulatory under "Useful Links and Documents" for design and construction guidance.

8. GC 45: Stream and Wetland Crossings.
(a) Projects should be designed and constructed to ensure long-term success using the most recent manual located at www.nae.usace.army.mil/missions/regulatory under "Stream and River Continuity," currently "Stream Simulation: An Ecological Approach to Providing Passage for Aquatic Organisms at Road-Stream Crossings, by the U.S. Forest Service." Section 5.3.3 is of particular importance. Sections 7.5.2.3 Construction Methods and 8.2.11 Stream-Simulation Bed Material Placement both show important steps in the project construction.
(b) For more information on High-Quality Stream Segments and their components see:
- **i.** High-Quality Stream Segments are shown at www.maine.gov/dep/gis/datamaps.
- **ii.** Class A Waters or Class AA Waters:

www.mainelegislature.org/legis/statutes/38/title38sec465.html, and
www.mainelegislature.org/legis/statutes/38/title38sec467.html.
- **iii.** Outstanding river segments www.mainelegislature.org/legis/statutes/38/title38sec480-P.html.

(c) The Massachusetts Dam Removal and the Wetland Regulations offer guidance to evaluate the positive and negative impacts of culvert replacement, including the loss of upstream wetlands, which may be offset by the overall benefits of the river restoration. See www.nae.usace.army.mil/missions/regulatory and then "Stream and River Continuity."

(d) The ME DOT's document "Waterway and Wildlife Crossing Policy and Design Guide for Aquatic Organism, Wildlife Habitat, and Hydrologic Connectivity," 3rd Edition, July 2008, may be used as guidance to evaluate impacts to aquatic, wildlife and surface water resources when designing, constructing, repairing and maintaining stream crossings. Note: Adherence to this DOT document does not ensure compliance with this GP. Projects must comply with the requirements of this GP including GC 45 and the Corps General Stream Crossing Standards contained therein. www.maine.gov/mdot/environmental-office-homepage/fishpassage/3rd%20edition%20-%20merged%20final%20version%207-01-08a1.pdf.
(e) GC 45(f): The Skidder Bridge Fact Sheet at www.nae.usace.army.mil/missions/regulatory under "Stream and River Continuity" may be a useful temporary span construction method.

9. GC 45: Wetland Crossings. The Maine DEP's crossing standards are at 06-096 DEP, Chapter 305: Permits by Rule, 9 & 10) Crossings (utility lines, pipes and cables). www.maine.gov/dep/blwq/rules/NRPA/2009/305/305_effective_2009.pdf

10. GC 23: Protection of Vernal Pools.
(a) The state's Significant Wildlife Habitat rules (Chapter 335, Section 9(C) "Habitat management standards for significant vernal pool habitat") are located at www.maine.gov/dep/blwq/docstand/nrpapage.htm#rule under "Rules."
(b) The following documents provide conservation recommendations:
i. Best Development Practices: Conserving pool-breeding amphibians in residential and commercial development in the northeastern U.S., Calhoun and Klemens, 2002. Chapter III, Management Goals and Recommendations, Pages 15 – 26, is particularly relevant. (Available for purchase at www.maineaudubon.org/resource/index.shtml and on Corps website*.)
ii. Science and Conservation of Vernal Pools in Northeastern North America, Calhoun and deMaynadier, 2008. Chapter 12, Conservation Recommendations section, Page 241, is particularly relevant. (Available for purchase via the internet. Chapter 12 is available on Corps website*.)
* www.nae.usace.army.mil/reg under "Vernal Pools."
(c) Cape Cod Curbing: For smaller roads and driveways, the most important design feature to consider is curbing. Granite curbs and some traditional curbing can act as a barrier to amphibian and hatchling turtle movements. Large numbers of salamanders have been intercepted in their migrations by curbs and catch basins. Use of Cape Cod curbs rather than traditional curbing may be one solution. Alternatively, where storm water management systems require more traditional curbing, it may be possible to design in escape ramps on either side of each catch basin. Cape Cod curbing is shown on Page 35 of the document cited in 10.b.i above. Bituminous material is not required; other materials such as granite are acceptable.
(d) The VP Directional Buffer Guidance document is located at www.nae.usace.army.mil/missions/regulatory under: 1) "State General Permits" and then "Maine," and 2) "Vernal Pools."

11. GC 29: Maintenance. River restoration projects that are designed to accommodate the natural dynamic tendencies of the fluvial system are maintained in accordance with the project's design objectives (Category 1) or the Corps authorization letter (Category 2). These projects are generally designed to support and implement channel assessment and management practices that recognize a stream's natural dynamic tendencies.

Appendix H: Federal Navigation Projects in Maine

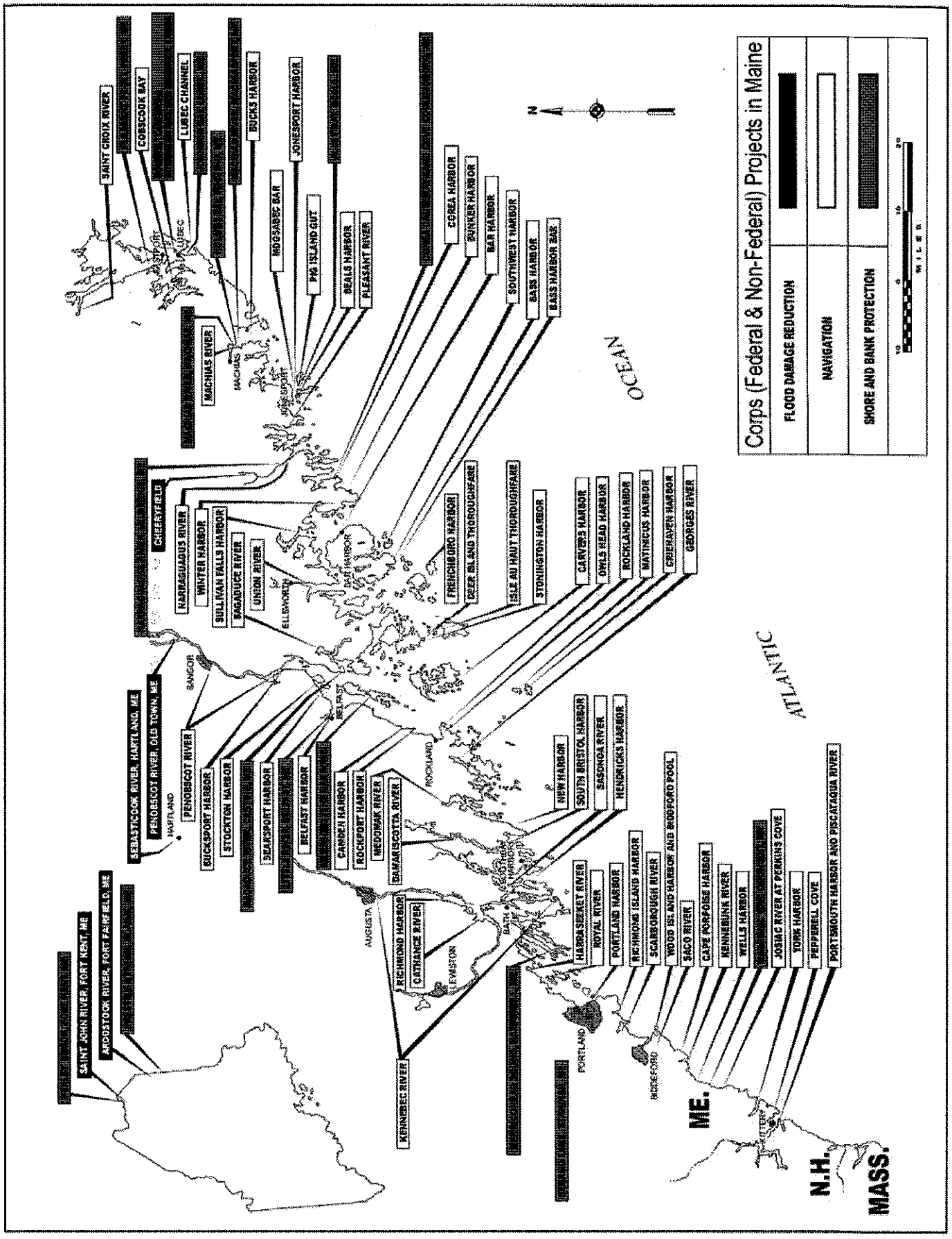

DEPARTMENT OF THE ARMY
NEW ENGLAND DISTRICT, CORPS OF ENGINEERS
696 VIRGINIA ROAD
CONCORD, MASSACHUSETTS 01742-2751

REPLY TO ATTENTION OF

MAINE GENERAL PERMIT (GP)
AUTHORIZATION LETTER AND SCREENING SUMMARY

RALPH NORWOOD IV
MAINE TURNPIKE AUTHORITY
2360 CONGRESS STREET
PORTLAND, MAINE 04102

CORPS PERMIT # NAE-2018-00363
CORPS GP ID# 18-212
STATE ID# L-27870-TG-A-N

DESCRIPTION OF WORK:
Place temporary and permanent fill below the ordinary high water line of an unnamed stream and in adjacent freshwater wetlands at Auburn, Maine in order to facilitate improvements to the Auburn Interchange on the Maine Turnpike. Improvements include toll equipment upgrades and associated ramp and road shoulder modifications, extension and slip lining of an existing culvert, side slope stabilization, and the relocation of a stream segment. The project will result in approximately 2,894 s.f. of permanent and 160 s.f. of temporary
Project Description Continued on Page 2

LAT/LONG COORDINATES : 44.037804° N -70.268863° W USGS QUAD: MINOT, ME

I. CORPS DETERMINATION:
Based on our review of the information you provided, we have determined that your project will have only minimal individual and cumulative impacts on waters and wetlands of the United States. **Your work is therefore authorized by the U.S. Army Corps of Engineers under the enclosed Federal Permit, the Maine General Permit (GP).** Accordingly, we do not plan to take any further action on this project.

You must perform the activity authorized herein in compliance with all the terms and conditions of the GP [including any attached Additional Conditions and any conditions placed on the State 401 Water Quality Certification including any required mitigation]. Please review the enclosed GP carefully, including the GP conditions beginning on page 5, to familiarize yourself with its contents. You are responsible for complying with all of the GP requirements; therefore you should be certain that whoever does the work fully understands all of the conditions. You may wish to discuss the conditions of this authorization with your contractor to ensure the contractor can accomplish the work in a manner that conforms to all requirements.

If you change the plans or construction methods for work within our jurisdiction, please contact us immediately to discuss modification of this authorization. This office must approve any changes before you undertake them.

Condition 38 of the GP (page 16) provides one year for completion of work that has commenced or is under contract to commence prior to the expiration of the GP on October 13, 2020. You will need to apply for reauthorization for any work within Corps jurisdiction that is not completed by October 13, 2021.

This authorization presumes the work shown on your plans noted above is in waters of the U.S. Should you desire to appeal our jurisdiction, please submit a request for an approved jurisdictional determination in writing to the undersigned.

No work may be started unless and until all other required local, State and Federal licenses and permits have been obtained. **This includes but is not limited to a Flood Hazard Development Permit issued by the town if necessary.**

II. STATE ACTIONS: PENDING [X], ISSUED [ ], DENIED [ ] DATE_____

APPLICATION TYPE: PBR:___, TIER 1:_____, TIER 2 : X, TIER 3:_____, LURC: _____ DMR LEASE: _____ NA: _____

III. FEDERAL ACTIONS:

JOINT PROCESSING MEETING: 4/5/18 LEVEL OF REVIEW: CATEGORY 1:_____ CATEGORY 2: X

AUTHORITY (Based on a review of plans and/or State/Federal applications): SEC 10_____, 404 X 10/404_____, 103_____

EXCLUSIONS: The exclusionary criteria identified in the general permit do not apply to this project.

FEDERAL RESOURCE AGENCY OBJECTIONS: EPA NO, USF&WS NO, NMFS NO

If you have any questions on this matter, please contact my staff at 207-623-8367 at our Augusta, Maine Project Office. In order for us to better serve you, we would appreciate your completing our Customer Service Survey located at http://corpsmapu.usace.army.mil/cm_apex/f?p=136:4:0

Jay L. Clement
JAY L. CLEMENT
SENIOR PROJECT MANAGER
MAINE PROJECT OFFICE

For Jay L. Clement 5/8/18
FRANK J. DEL GIUDICE DATE
CHIEF, PERMITS & ENFORCEMENT BRANCH
REGULATORY DIVISION

Project Description Continued from Page 1

stream bed impact and 6,327 s.f. of permanent wetland impact. Approximately 629 linear feet of stream will be relocated to facilitate slope stabilization. This work is shown on the attached plans entitled "EXIT 75, TOLL IMPROVEMENTS AND SLOPE REPAIR" in 19 sheets dated "1/18".

PLEASE NOTE THE FOLLOWING CONDITIONS FOR DEPARTMENT OF THE ARMY GENERAL PERMIT NO. NAE-2018-00363

1. This authorization requires you to 1) notify us before beginning work so we may inspect the project, and 2) submit a Compliance Certification Form. You must complete and return the enclosed Work Start Notification Form(s) to this office at least two weeks before the anticipated starting date. You must complete and return the enclosed Compliance Certification Form within one month following the completion of the authorized work and any required mitigation (but not mitigation monitoring, which requires separate submittals).

2. The permittee shall assure that a copy of this permit is at the work site whenever work is being performed and that all personnel performing work at the site of the work authorized by this permit are fully aware of the terms and conditions of the permit. This permit, including its drawings and any appendices and other attachments, shall be made a part of any and all contracts and sub-contracts for work which affects areas of Corps of Engineers' jurisdiction at the site of the work authorized by this permit. This shall be done by including the entire permit in the specifications for the work. If the permit is issued after construction specifications but before receipt of bids or quotes, the entire permit shall be included as an addendum to the specifications. The term "entire permit" includes permit amendments. Although the permittee may assign various aspects of the work to different contractors or sub-contractors, all contractors and sub-contractors shall be obligated by contract to comply with all environmental protection provisions of the entire permit, and no contract or sub-contract shall require or allow unauthorized work in areas of Corps of Engineers jurisdiction.

3. Adequate sedimentation and erosion control devices, such as geotextile silt fences or other devices capable of filtering the fines involved, shall be installed and properly maintained to minimize impacts during construction. These devices must be removed upon completion of work and stabilization of disturbed areas. The sediment collected by these devices must also be removed and placed upland, in a manner that will prevent its later erosion and transport to a waterway or wetland.

4. All exposed soils resulting from the construction will be promptly seeded and mulched in order to achieve vegetative stabilization.

5. All areas of temporary fill shall be restored to their original contour and character upon completion of the work.

US Army Corps of Engineers®
New England District

GENERAL PERMIT
WORK-START NOTIFICATION FORM
(Minimum Notice: Two weeks before work begins)

****
* MAIL TO: U.S. Army Corps of Engineers, New England District *
* Permits and Enforcement Branch *
* Regulatory Division *
* 696 Virginia Road *
* Concord, Massachusetts 01742-2751 *
****

Corps of Engineers Permit No. NAE-2018-00363 was issued to the Maine Turnpike Authority on May 8, 2018. This work is located in an unnamed stream and in adjacent freshwater wetlands at Auburn, Maine. The permit authorized the permittee to place temporary and permanent fill in order to facilitate improvements to the Auburn Interchange on the Maine Turnpike. Improvements include toll equipment upgrades and associated ramp and road shoulder modifications, extension and slip lining of an existing culvert, side slope stabilization, and the relocation of a stream segment. The project will result in approximately 2,894 s.f. of permanent and 160 s.f. of temporary stream bed impact and 6,327 s.f. of permanent wetland impact. Approximately 629 linear feet of stream will be relocated to facilitate slope stabilization.

The people (e.g., contractor) listed below will do the work, and they understand the permit's conditions and limitations.

PLEASE PRINT OR TYPE

Name of Person/Firm: _____

Business Address: _____

_____

_____

_____

Telephone Numbers: (____) _____ (____) _____

Proposed Work Dates: **Start:** _____ **Finish:** _____

Permittee/Agent Signature: _____ **Date:** _____

Printed Name: _____ **Title:** _____

Date Permit Issued: _____ **Date Permit Expires:** _____

****

FOR USE BY THE CORPS OF ENGINEERS

PM: Clement **Submittals Required:** No

Inspection Recommendation: Inspect as convenient

US Army Corps of Engineers®
New England District

(Minimum Notice: Permittee must sign and return notification within one month of the completion of work.)

COMPLIANCE CERTIFICATION FORM

Permit Number: NAE-2018-00363

Project Manager Clement

Name of Permittee: Maine Turnpike Authority

Permit Issuance Date: _____

Please sign this certification and return it to the following address upon completion of the activity and any mitigation required by the permit. You must submit this after the mitigation is complete, but not the mitigation monitoring, which requires separate submittals.

```
*********************************************************************
* MAIL TO: U.S. Army Corps of Engineers, New England District      *
*          Permits and Enforcement Branch C                        *
*          Regulatory Division                                     *
*          696 Virginia Road                                       *
*          Concord, Massachusetts 01742-2751                       *
*********************************************************************
```

Please note that your permitted activity is subject to a compliance inspection by an U.S. Army Corps of Engineers representative. If you fail to comply with this permit you are subject to permit suspension, modification, or revocation.

I hereby certify that the work authorized by the above referenced permit was completed in accordance with the terms and conditions of the above referenced permit, and any required mitigation was completed in accordance with the permit conditions.

_____ Signature of Permittee

_____ Date

_____ Printed Name

_____ Date of Work Completion

( ) _____ Telephone Number

( ) _____ Telephone Number

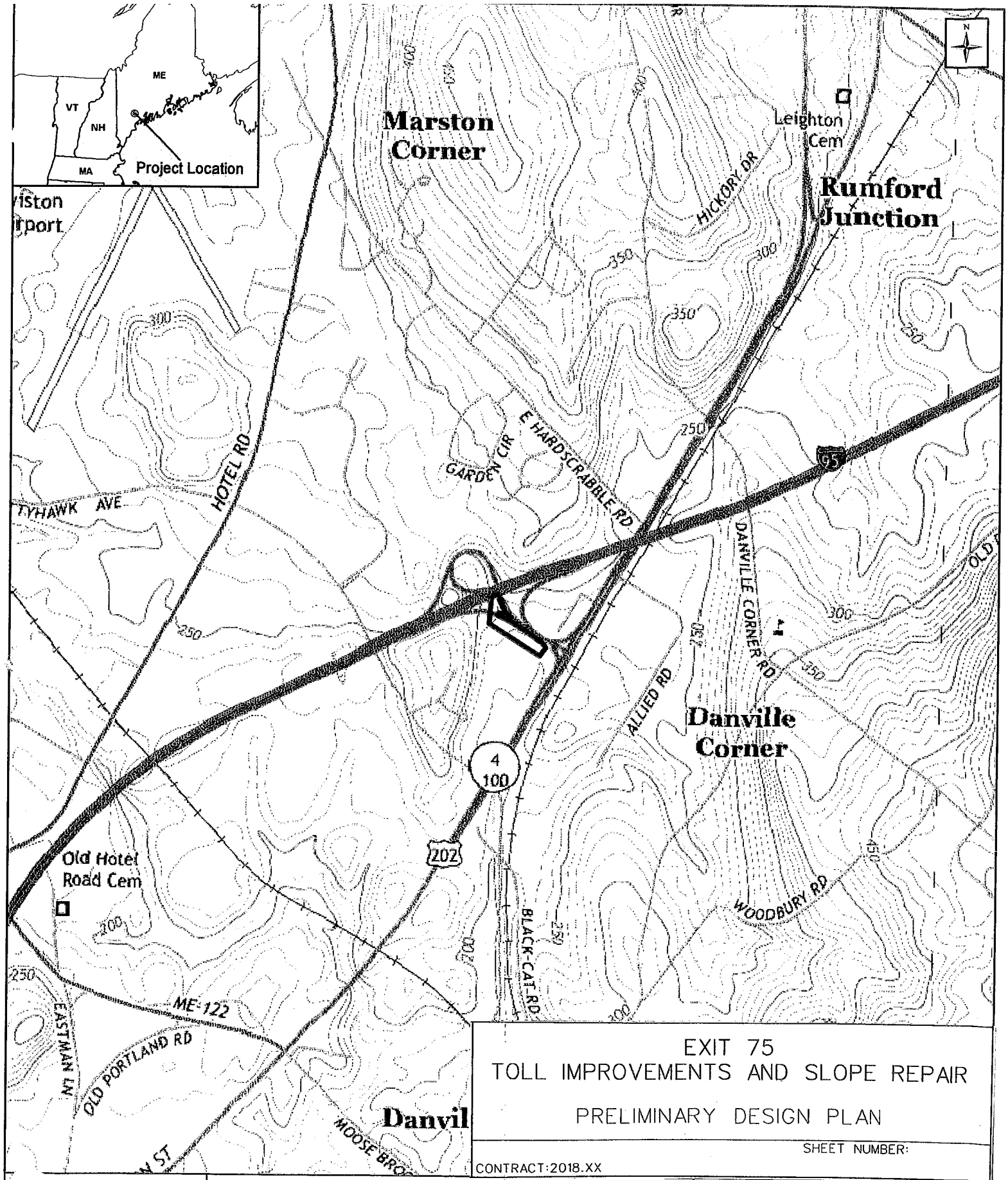

EXIT 75
TOLL IMPROVEMENTS AND SLOPE REPAIR

PRELIMINARY DESIGN PLAN

SHEET NUMBER:

CONTRACT:2018.XX

For: HNTB

Prepared By: NewEarth Ecological Consulting, LLC

Legend

Project Area

0 500 1,000 2,000 3,000 Feet

Figure 1. Site Location and Topography

Maine Turnpike Authority
Exit 75 Bank Stabilization Project
Auburn, Maine

Source: United States Geological Survey, 2014.

Date: 12/17/2017

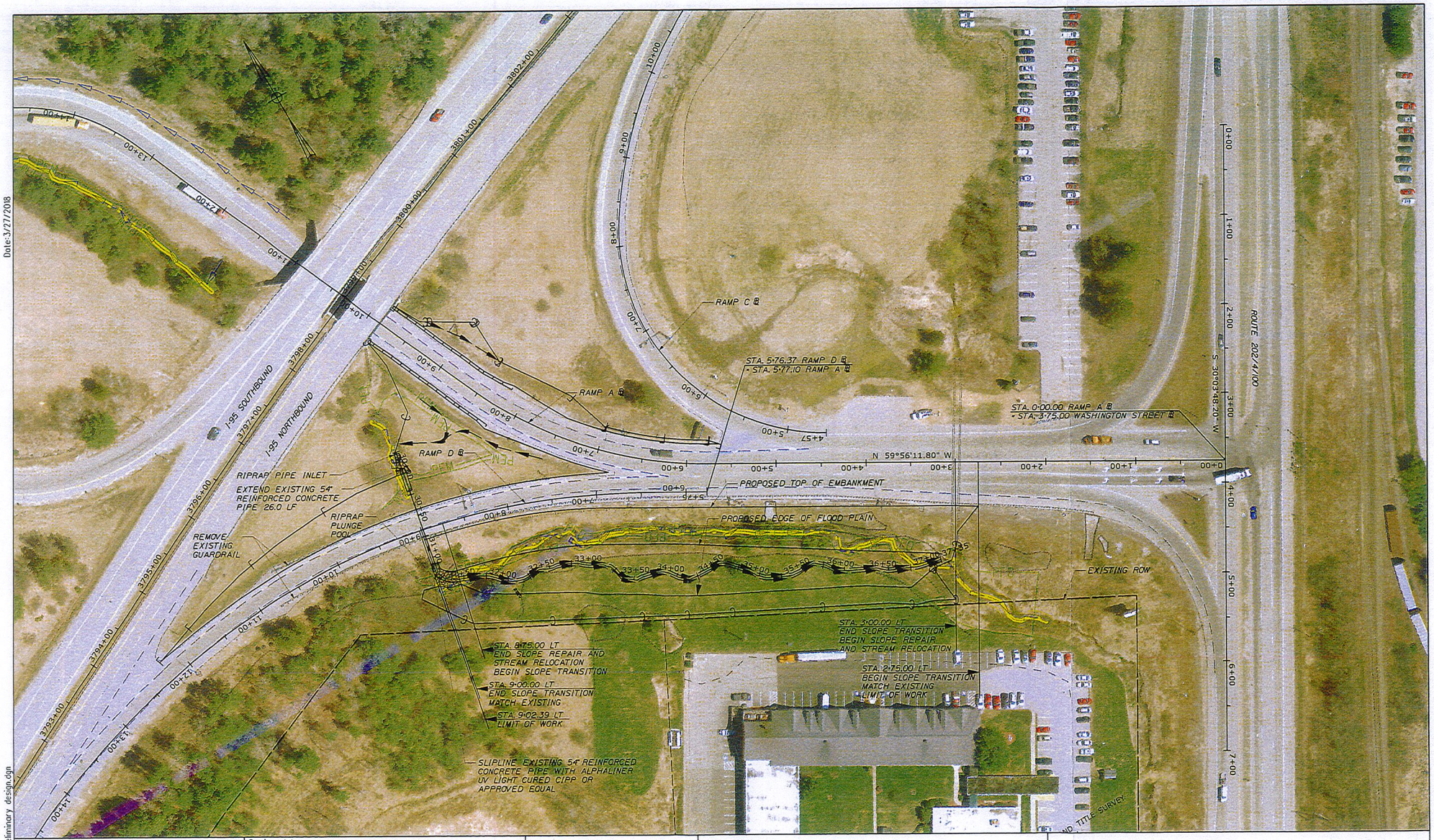

Date: 3/27/2018

Scale: 50 0 50 100
Scale of Feet

No.	Revision	By	Date

Designed by:

HNTB

CONSULTANT PROJECT MANAGER: R. Bruce Munger, P.E., P.T.O.E.

	By	Date		By	Date
Designed	EDD	03/18	Checked	RWH	03/18

HNTB CORPORATION
340 County Road, Suite 6-C
Westbrook, ME 04092
TEL (207) 774-5155
FAX (207) 228-0909

MAINE TURNPIKE

THE GOLD STAR MEMORIAL HIGHWAY

EXIT 75
TOLL IMPROVEMENTS AND SLOPE REPAIR

PRELIMINARY DESIGN PLAN

SHEET NUMBER: PL-01

CONTRACT: 2018 XX

Filename: Attachment 5_preliminary design.dgn

NOTES:

1. PLACEMENT OF RIVER STONE (I.E. SMALL BOULDERS), STREAM STONE (I.E. COBBLE), AND WOODY DEBRIS RANDOMLY WITHIN THE STREAM BED AND BANKS TO CREATE HABITAT AS DIRECTED BY THE RESIDENT AND PER MDIFW STREAM HABITAT IMPROVEMENT GUIDANCE.

2. EXCAVATION FOR THE STREAM SHALL BE PAID FOR UNDER ITEM 203.20 COMMON EXCAVATION.

3. PLANTING SPECIES WILL BE NATIVE FOR WETLAND/RIPARIAN/STREAM SPECIES AND UPLAND SPECIES AND WILL INCLUDE HERB, SHRUB, AND TREE COVER FOR FILTRATION AND SHADE..

4. EXISTING SOIL TYPES ARE SILTY/CLAY. SALVAGE EXISTING ORGANIC MATERIAL AND GRAVELLY SOILS TO DEPOSIT ON STREAM SHELF AND HIGHER GROUND. MINIMUM 4" TOP SOIL SEED/MULCH ON SIDE SLOPE.

5. WHERE FEASIBLE, USE SOIL AND GRAVEL FROM THE EXISTING STREAM CHANNEL AND BANKS TO ALIGN THE CREATED STREAM SHELF AND ADJACENT AREAS OF THE CREATED CHANNEL.

6. PLANTINGS ON UPLAND SLOPES ARE PROVIDED FOR SHADE.

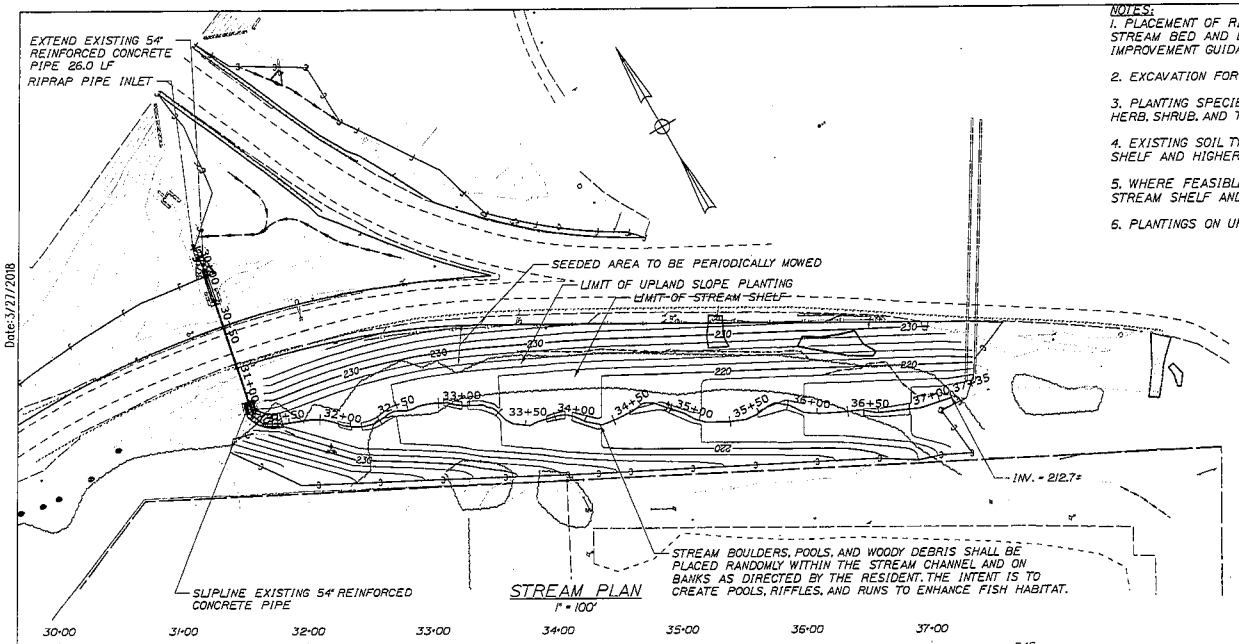

STREAM PLAN
1" = 100'

AUBURN EXIT 75 SLOPE REPAIR PLANTINGS	
COMMON NAME	SCIENTIFIC NAME
STREAM/WETLAND ZONE	
TREES	
LARCH	LARIX LARICINA
RED MAPLE	ACER RUBRUM
BLACK WILLOW	SALIX NIGRA
GREEN ASH	FRAXINUS PENNSYLVANICA
DOWNY HAWTHORN	CRATAEGUS MOLLIS
SHRUBS	
SPECKLED ALDER	ALNUS INCANA
RED OSIER DOGWOOD	CORNUS SERICEA (ALBA)
BUTTONBUSH	CEPHALANTHUS OCCIDENTALIS
WINTERBERRY	ILEX VERTICILLATA
PUSSY WILLOW	SALIX DISCOLOR
HIGHBUSH BLUEBERRY	VACCINIUM CORYMBOSUM
SEED MIX	
SEEDING METHOD NO. 2 MODIFIED - SEE SPECIFICATIONS	
UPLAND SLOPES	
TREES	
BALSAM FIR	ABIES BALSAMEA
BLACK CHERRY	PRUNUS SEROTINA
EASTERN WHITE PINE	PINUS STROBUS
SUGAR MAPLE	ACER SACCHARUM
SHRUBS	
BEAKED HAZELNUT	CORYLUS CORNUTA
NANNYBERRY	VIBURNUM LENTAGO
SEED MIX	
SEEDING METHOD NO. 2 MODIFIED - SEE SPECIFICATIONS	

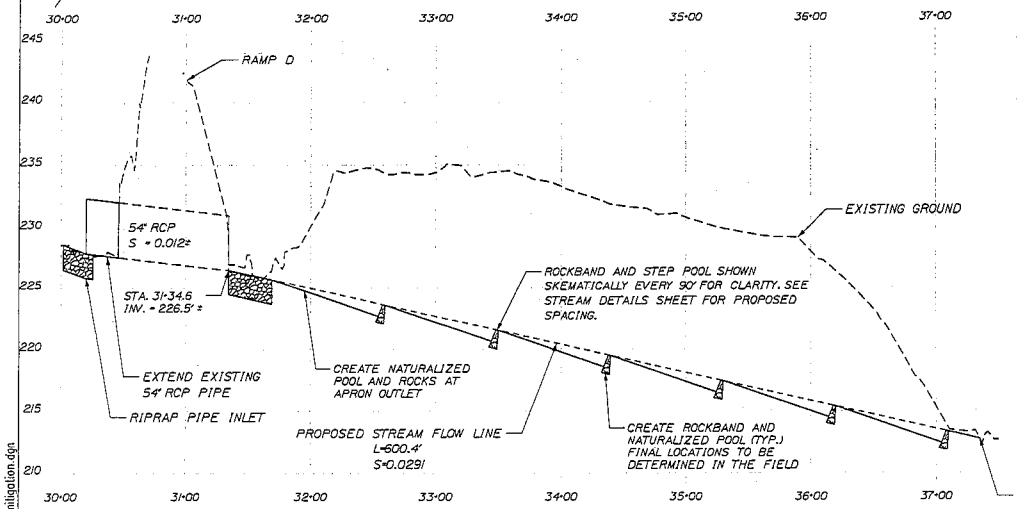

STREAM PROFILE

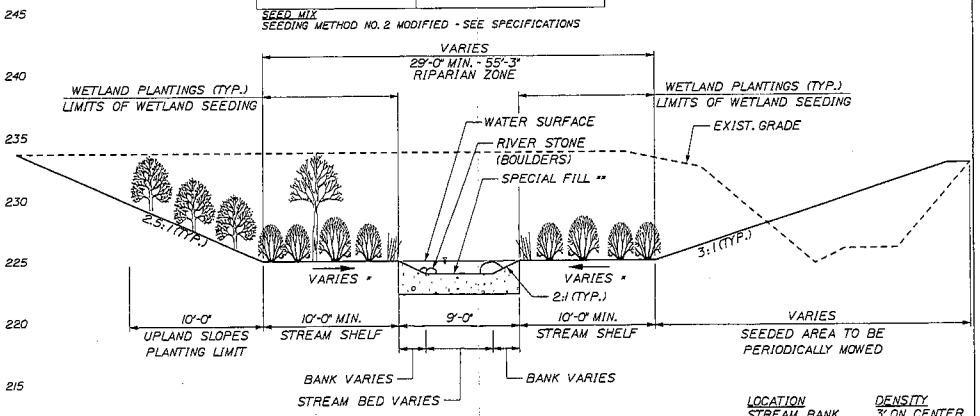

STREAM RESTORATION - LOOKING UPSTREAM
TYPICAL SECTION
N.T.S.

LOCATION	DENSITY
STREAM BANK	3' ON CENTER
STREAM SHELF	5' ON CENTER
SIDE SLOPE	10' ON CENTER

* SLOPE VARIES TO CREATE MICROTOPOGRAPHY

** SEE STREAM DETAILS SHEET FOR LAYOUT OF ROCKBANDS AND SPECIAL FILL

Scale: 50 0 50 100
Scale of Feet

No.	Revision	By	Date

Designed by:

HNTB

CONSULTANT PROJECT MANAGER: R. Bruce Munger, P.E., P.T.O.E.

	By	Date		By	Date
Designed	EDD	02/18	Checked	RWH	02/18

HNTB CORPORATION
340 County Road, Suite 6-C
Westbrook, ME 04092
TEL (207) 774-5155
FAX (207) 228-0909

MAINE TURNPIKE

THE GOLD STAR MEMORIAL HIGHWAY

EXIT 75
TOLL IMPROVEMENTS AND SLOPE REPAIR

STREAM MITIGATION

SHEET NUMBER: PL-XX
Att OF 17

CONTRACT:2018.XX

Date:3/27/2018

filename: Attachment 6_stream mitigation.dgn

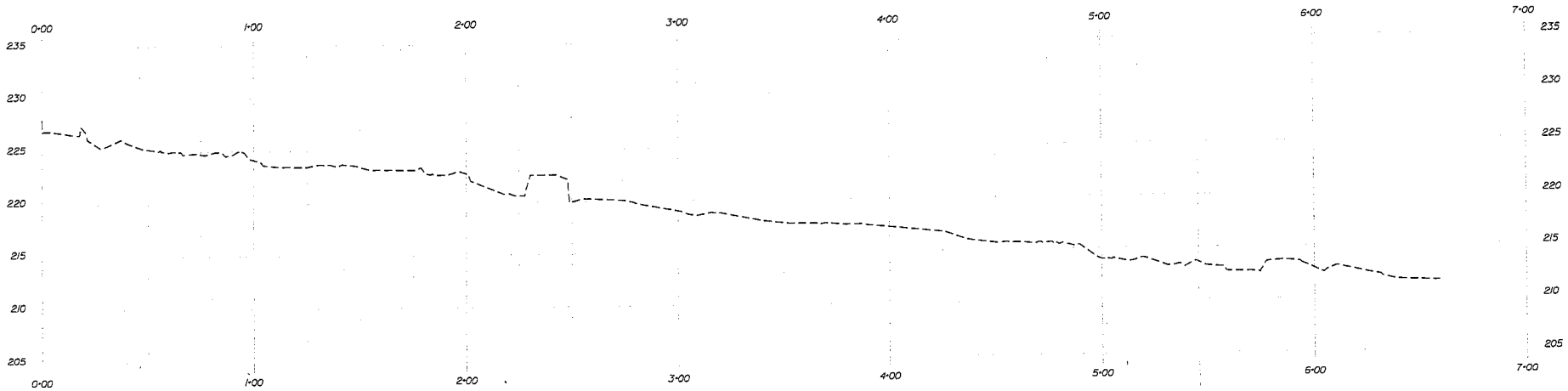

EXISTING STREAM PROFILE

Scale: Horiz. 25 0 25 50
Vert. 5 0 5 10

No.	Revision	By	Date

Designed by:

HNTB

CONSULTANT PROJECT MANAGER: R. Bruce Munger, P.E., P.T.O.E.

	By	Date		By	Date
Designed	EDD	02/18	Checked	RWH	02/18

HNTB CORPORATION
340 County Road, Suite 6-C
Westbrook, ME 04092
TEL (207) 774-5155
FAX (207) 228-0909

MAINE TURNPIKE

THE GOLD STAR MEMORIAL HIGHWAY

EXIT 75
TOLL IMPROVEMENTS AND SLOPE REPAIR

EXISTING STREAM PROFILE

SHEET NUMBER:

CONTRACT:2018.XX

- OF -

Date:3/27/2018

Filename: Attachment 6.2_Existing stream Profile.dgn

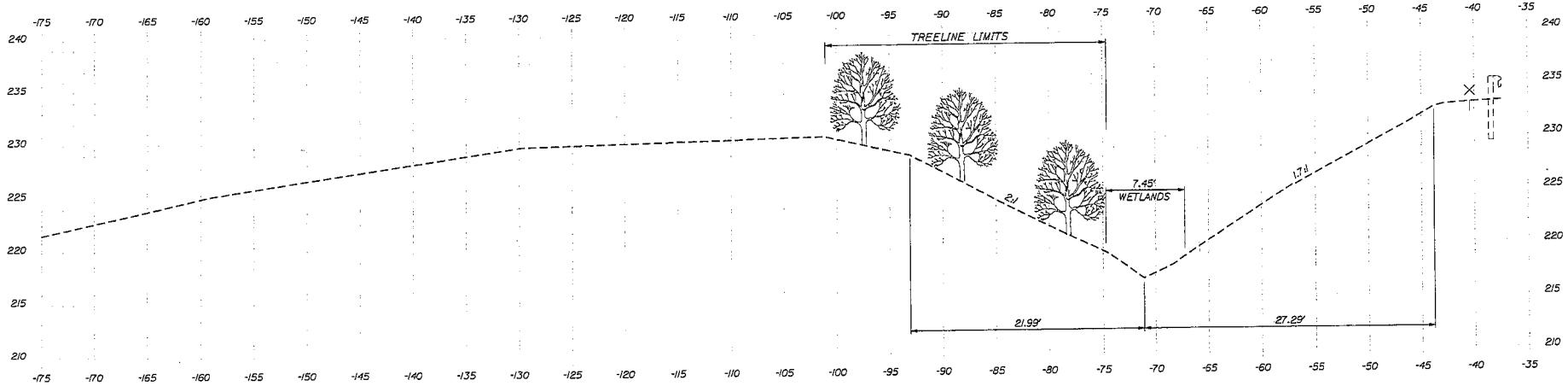

5+00.00

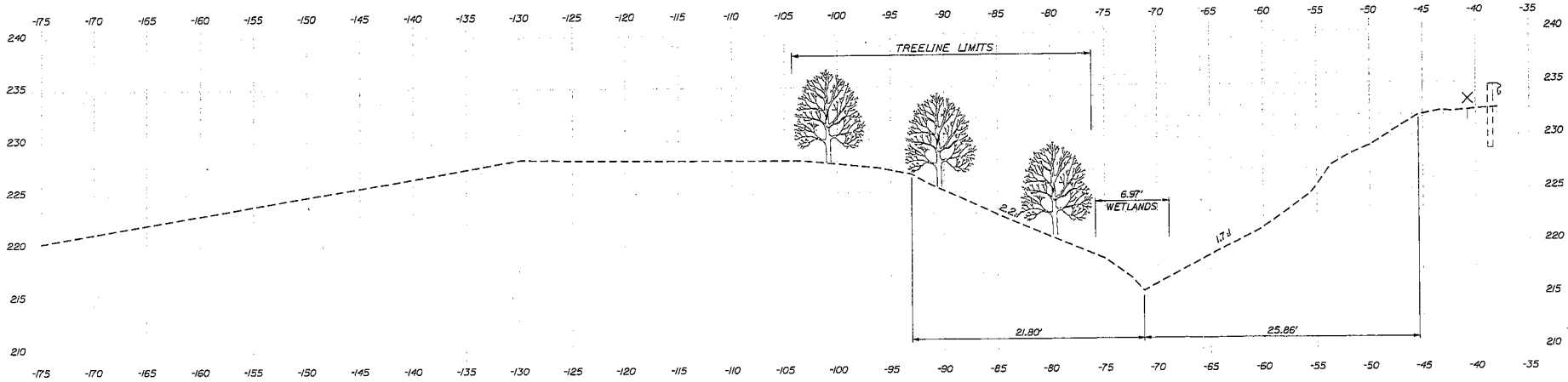

4+50.00

Scale: 5 0 5 10
Scale of Feet

No.	Revision	By	Date

Designed by:

HNTB

CONSULTANT PROJECT MANAGER: R. Bruce Munger, P.E., P.T.O.E.

	By	Date		By	Date
Designed	EDD	03/18	Checked	CAH	03/18

HNTB CORPORATION
340 County Road, Suite 6-C
Westbrook, ME 04092
TEL (207) 774-5155
FAX (207) 228-0909

MAINE TURNPIKE

THE GOLD STAR MEMORIAL HIGHWAY

EXIT 75
TOLL IMPROVEMENTS AND SLOPE REPAIR
EXISTING STREAM CROSS SECTIONS
STA. 4+50.00 TO STA. 5+00.00

SHEET NUMBER: XS-02
- OF -

CONTRACT:2018.XX

Date:3/27/2018

ename: XSect_Existing.dgn

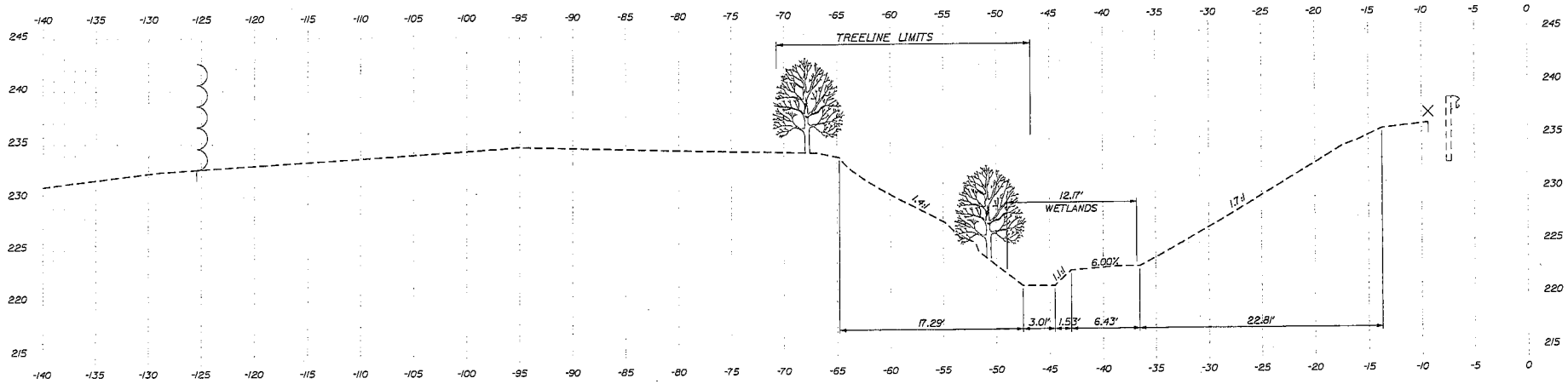

7+00.00

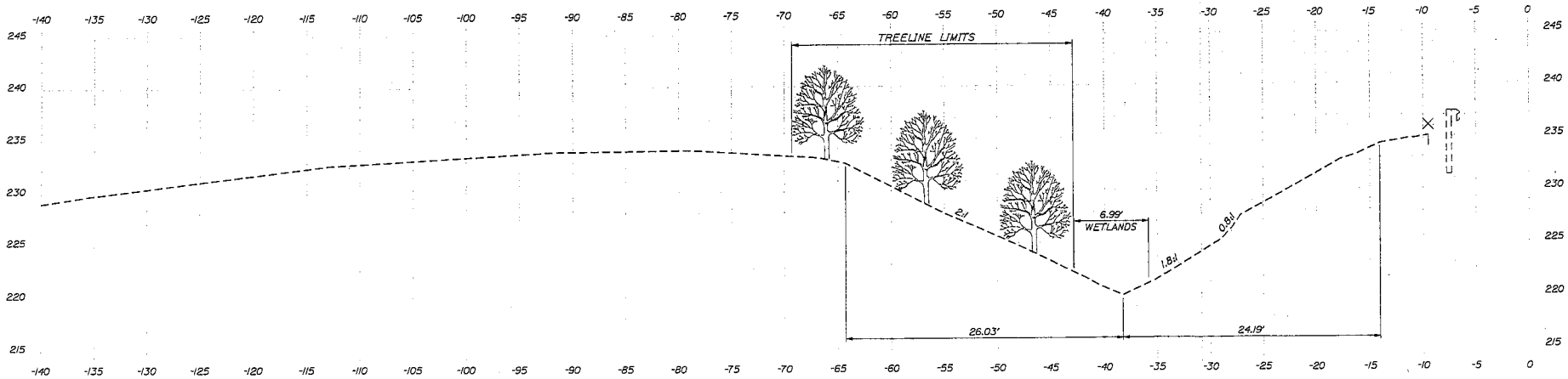

6+50.00

Date: 3/27/2018

Filename: XSect_Existing.dgn

Scale: 5 0 5 10 Scale of Feet

No.	Revision	By	Date

Designed by:

HNTB

CONSULTANT PROJECT MANAGER: R. Bruce Munger, P.E., P.T.O.E.

	By	Date		By	Date
Designed	EDD	03/18	Checked	CAH	03/18

HNTB CORPORATION
340 County Road, Suite 6-C
Westbrook, ME 04092
TEL (207) 774-5155
FAX (207) 228-0909

MAINE TURNPIKE

THE GOLD STAR MEMORIAL HIGHWAY

EXIT 75
TOLL IMPROVEMENTS AND SLOPE REPAIR
EXISTING STREAM CROSS SECTIONS
STA. 6+50.00 TO STA. 7+00.00

SHEET NUMBER: XS-04
- OF -

CONTRACT: 2018 XX

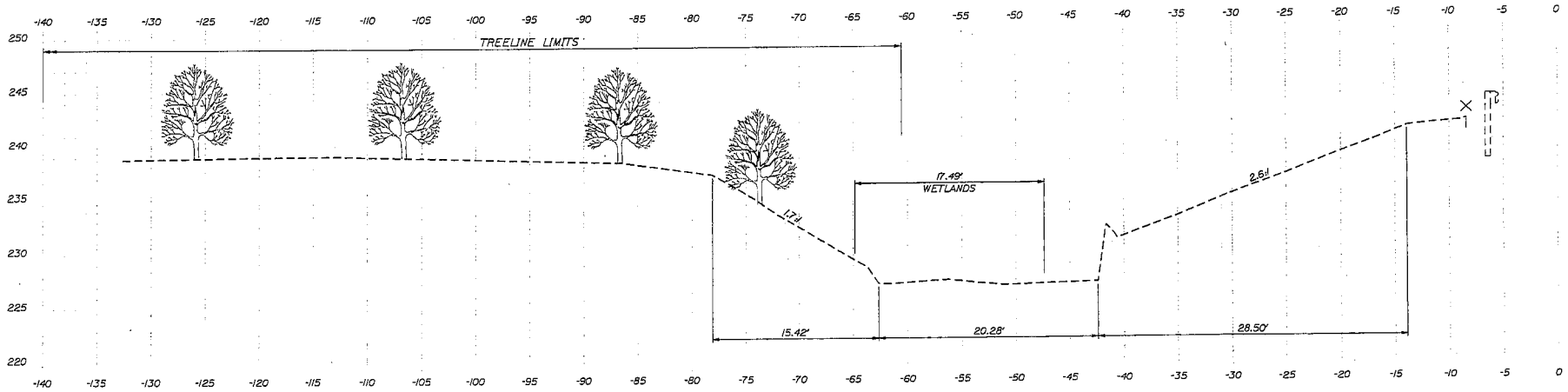

9+00.00

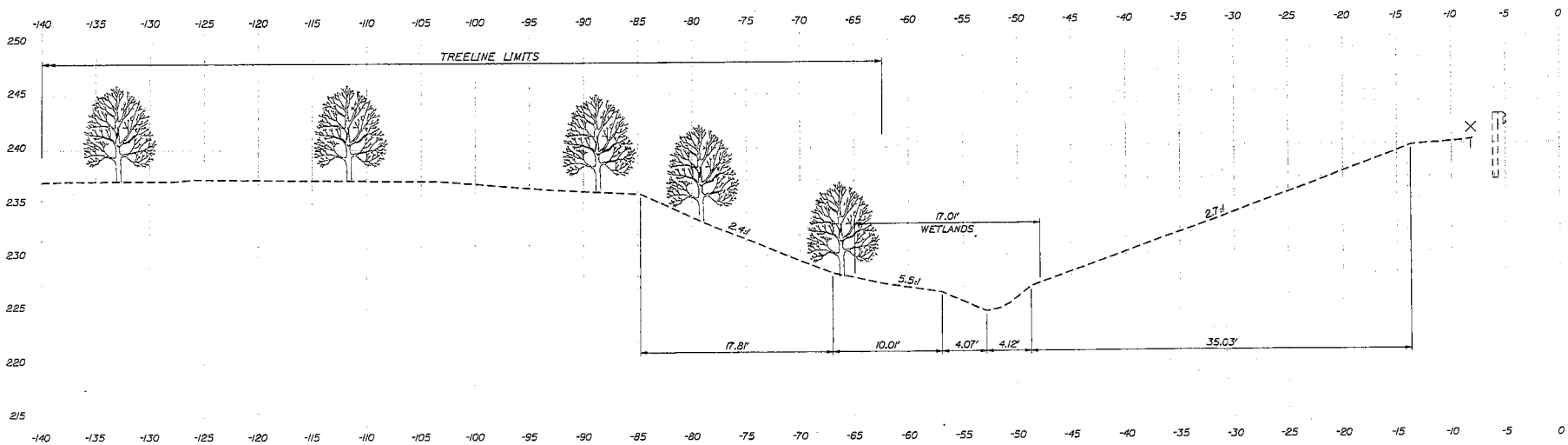

8+50.00

Date: 3/27/2018

Filename: XSect_Existing.dgn

Scale: 5 0 5 10
Scale of Feet

No.	Revision	By	Date

Designed by:

HNTB

CONSULTANT PROJECT MANAGER: R. Bruce Munger, P.E., P.T.O.E.

	By	Date		By	Date
Designed	EDD	03/18	Checked	CAH	03/18

HNTB CORPORATION
340 County Road, Suite 6-C
Westbrook, ME 04092
TEL (207) 774-5155
FAX (207) 228-0909

MAINE TURNPIKE

THE GOLD STAR MEMORIAL HIGHWAY

EXIT 75
TOLL IMPROVEMENTS AND SLOPE REPAIR
EXISTING STREAM CROSS SECTIONS
STA. 8+50.00 TO STA. 9+00.00

SHEET NUMBER: XS-06
- OF -

CONTRACT: 2018 XX

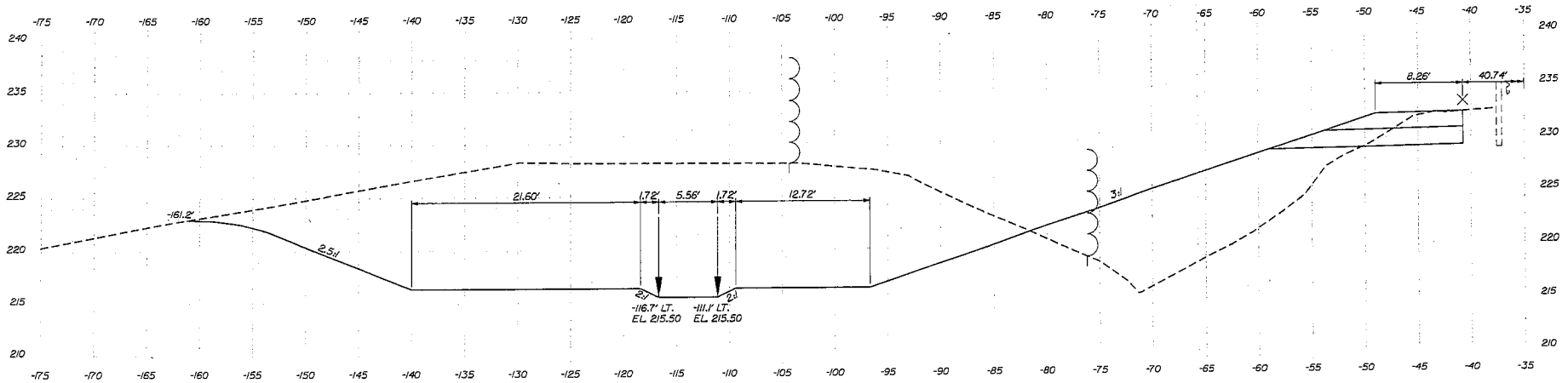

4+50.00

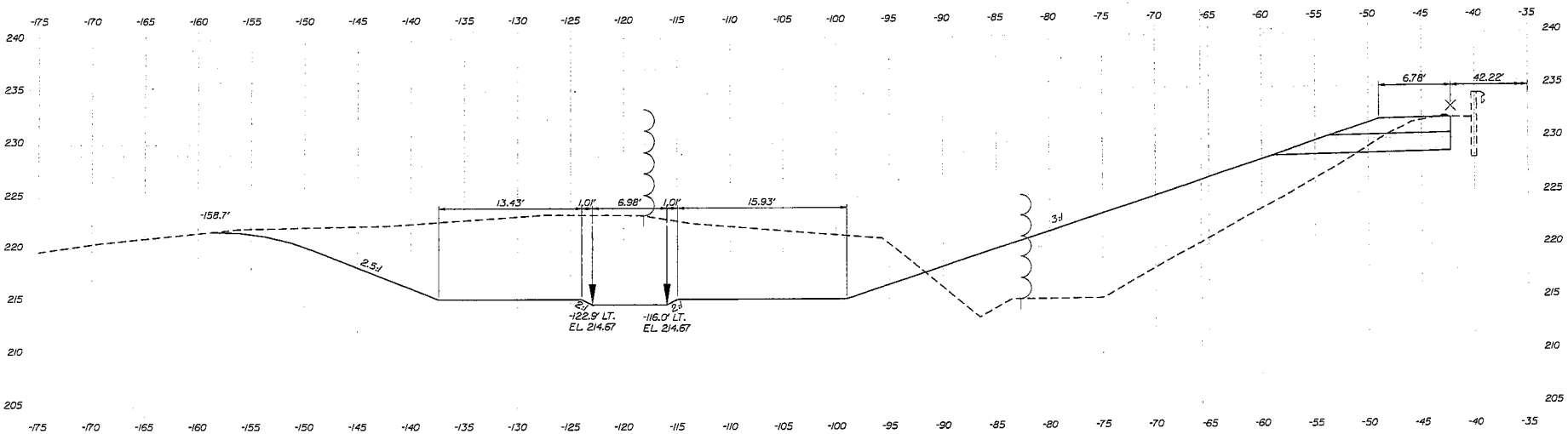

4+00.00

Date: 3/21/2018

Filename: XSect.dgn

Scale: 5 0 5 10
Scale of Feet

No.	Revision	By	Date

Designed by:

HNTB

CONSULTANT PROJECT MANAGER: R. Bruce Munger, P.E., P.T.O.E.

	By	Date		By	Date
Designed	EDD	01/18	Checked	RWH	01/18

HNTB CORPORATION
340 County Road, Suite 6-C
Westbrook, ME 04092
TEL (207) 774-5155
FAX (207) 228-0909

MAINE TURNPIKE

THE GOLD STAR MEMORIAL HIGHWAY

EXIT 75
TOLL IMPROVEMENTS AND SLOPE REPAIR
RAMP A
STA. 4+00.00 TO STA. 4+50.00

SHEET NUMBER: XS-02

CONTRACT: 2018 XX

- OF -

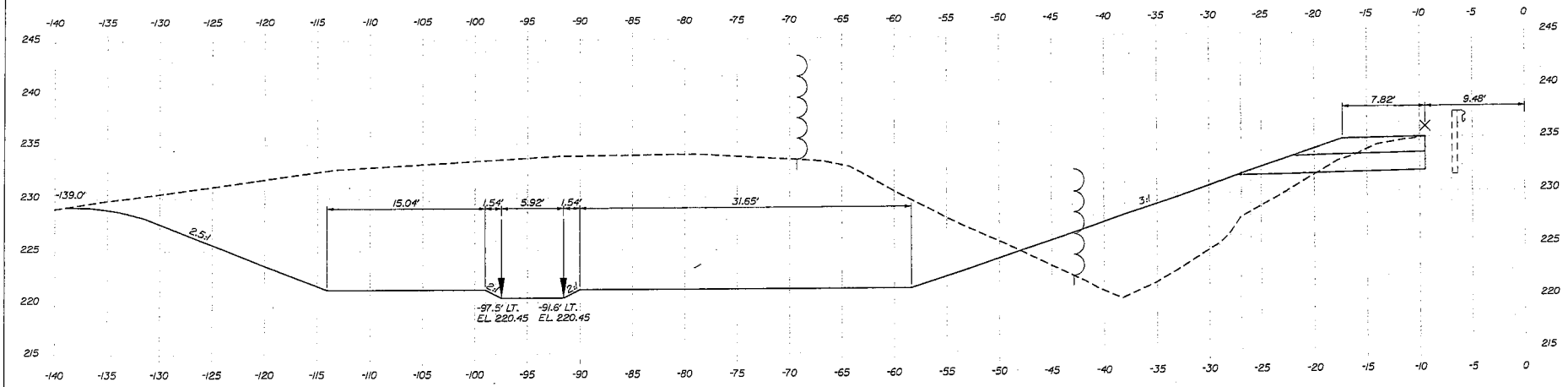

6+50.00

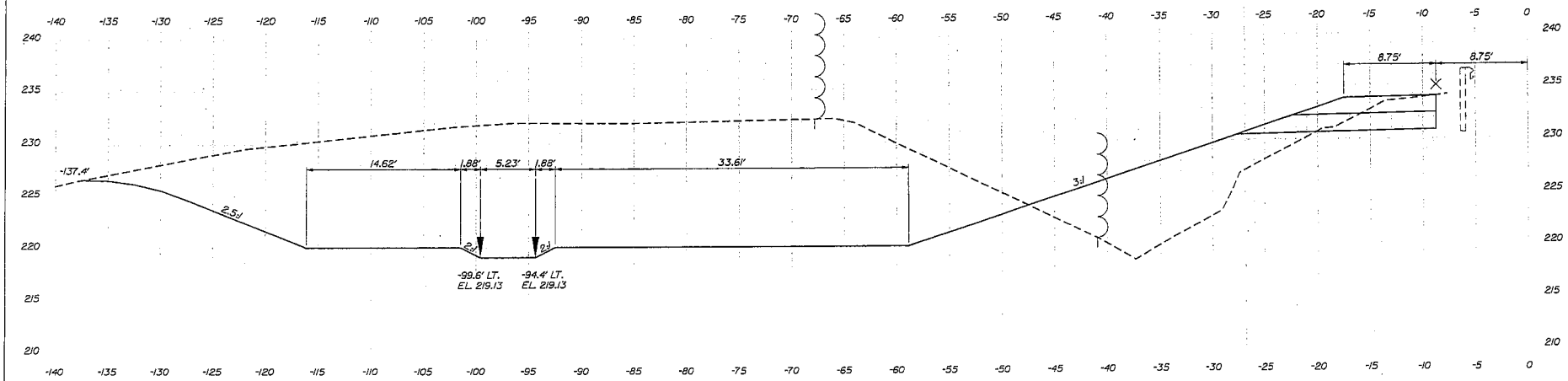

6+00.00

Scale: 5 0 5 10
Scale of Feet

No.	Revision	By	Date

Designed by:

HNTB

CONSULTANT PROJECT MANAGER: R. Bruce Munger, P.E., P.T.O.E.

	By	Date		By	Date
Designed	EDD	01/18	Checked	RWH	01/18

HNTB CORPORATION
340 County Road, Suite 6-C
Westbrook, ME 04092
TEL (207) 774-5155
FAX (207) 228-0909

MAINE TURNPIKE

THE GOLD STAR MEMORIAL HIGHWAY

EXIT 75
TOLL IMPROVEMENTS AND SLOPE REPAIR
RAMP D
STA. 6+00.00 TO STA. 6+50.00

SHEET NUMBER: XS-04
- OF -

CONTRACT: 2018 XX

filename: XSect.dgn

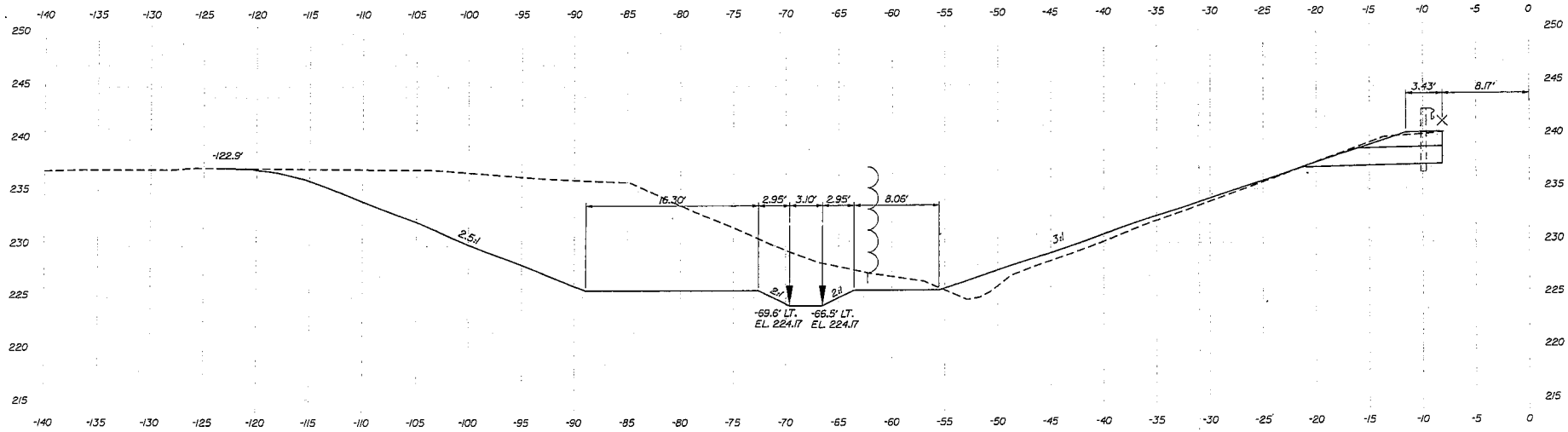

8+50.00

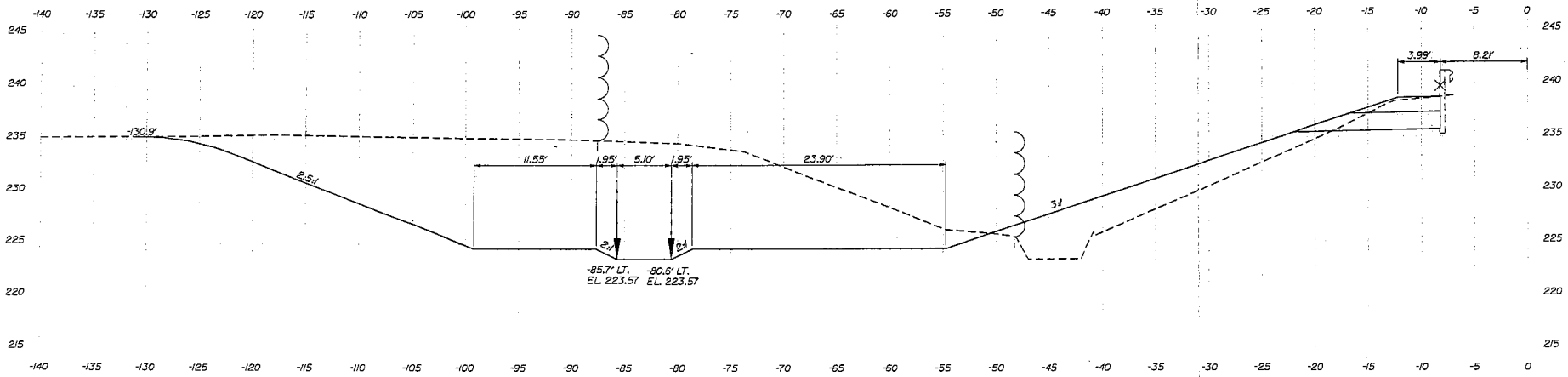

8+00.00

Scale: 5 0 5 10
Scale of Feet

No.	Revision	By	Date

Designed by:

HNTB

CONSULTANT PROJECT MANAGER: R. Bruce Munger, P.E., P.T.O.E.

	By	Date		By	Date
Designed	EDD	01/18	Checked	RWH	01/18
Drawn	BEB	01/18	In Charge of	RAL	01/18

HNTB CORPORATION
340 County Road, Suite 6-C
Westbrook, ME 04092
TEL (207) 774-5155
FAX (207) 228-0909

MAINE TURNPIKE

THE GOLD STAR MEMORIAL HIGHWAY

MTA PROJECT MANAGER: Ralph C. Norwood IV, P.E., P.T.O.E.

EXIT 75
TOLL IMPROVEMENTS AND SLOPE REPAIR
RAMP D
STA. 8+00.00 TO STA. 8+50.00

SHEET NUMBER: XS-06
- OF -

CONTRACT:2018.XX

Filename: XSect.dgn

APPENDIX B

MS4 FORMS

Maine Turnpike Authority
MS4 Stormwater Awareness Plan

Developing and implementing a Best Management Plan (BMP) Adoption Plan is a requirement of the Maine Department of Environmental Protection's (DEP's) *General Permit for the Discharge of Stormwater from Maine Department of Transportation (MaineDOT) and Maine Turnpike Authority (MTA) Municipal Separate Storm Sewer Systems* (MS4s). Since MTA is subject to this MS4 permit and its six *Minimum Control Measures* (MCMs), *Part IV(H)(1)(a)(ii)* requires MTA to conduct Public Education and Outreach (MCM #1) efforts that **encourage *"employees and contractors to utilize BMPs that minimize stormwater pollution."***

1.0 PERMIT LANGUAGE

Part IV(H)(1) of the MS4 Permit establishes three goals for *MCM #1 - Public Education and Outreach on Stormwater Impacts*. These include the following:

1. *To raise awareness that polluted stormwater runoff is one of the most significant sources of water quality problems for Maine's waters;*
2. *To motivate staff and contractors to use Best Management Practices (BMPs) which reduce polluted stormwater runoff; and*
3. *To reduce polluted stormwater runoff as a result of increased awareness and utilization of BMPs.*

In addition to continuing outreach efforts from the previous MS4 Permit (e.g., 5-year cycle)[1], MTA must satisfy these three goals by encouraging employees and contractors to use BMPs that minimize stormwater pollution as part of this Targeted BMP Adoption Plan. The progress and effectiveness of the Plan and associated efforts must then be evaluated and included in each annual report submitted to Maine DEP in accordance with *Part IV(J)* of the MS4 Permit. As part of this evaluation, MTA must include an assessment of process indicators and impact indicators to evaluate efforts in meeting these goals. In the fifth annual report, the BMP Adoption Plan shall be reviewed fully and include analysis of the process and impact indicators.

2.0 COVERAGE AREA

This plan has been developed for implementation by MTA to meet MS4 Permit requirements for Urbanized Areas (UAs) within MTA's right-of-way (ROW).

Process indicators are related to the execution of the program, such as (1) percent or number of employees who attend a training session; or (2) completion of a particular action item (e.g., distributing posters to employee work place and/or contractor job site).

Impact indicators are related to the achievement of the goals and objectives of the program, such as (1) observable/measurable effects on behavior; or (2) percent or number of employees to describe sources of storm water pollution, proper spill response, or maintenance of a BMP.

[1] Public education and outreach efforts continued from the previous MS4 permit cycle include (but are not limited to) conducting annual stormwater pollution prevention/spill prevention control and countermeasures (SPCC) training to MTA maintenance and engineering employees, as well as other Measurable Goals that can be found in MTA's Stormwater Program Management Plan (SPMP) dated December 2013.

3.0 OBJECTIVE

The objective of this Stormwater Awareness Plan is to raise awareness among MTA employees and contractors regarding stormwater issues. For example, stormwater runoff is one of the most significant sources of water quality problems for Maine's waters.

The goal of the Stormwater Awareness Plan is to provide information relative to stormwater impacts in an effort to raise awareness of MTA employees. For example, 100% of Highway Maintenance employees and Engineering Inspectors will attend training sessions at which stormwater issues and impacts will be addressed. Additionally, MTA will also work to raise awareness among MTA employees in other departments, such as Fare Collections by providing abbreviated Stormwater/Spill Prevention and Response training to supervisors and managers who will in turn inform additional employees regarding stormwater issues relative to MTA operations.

The goal of this Plan is to also raise awareness of contractors by providing this Plan, as well as the Targeted BMP Adoption Plan (which is designed to motivate employees and contractors to use BMPs to reduce polluted stormwater runoff), prior to starting work on MTA projects.

4.0 MESSAGE

The message MTA will strive to impart on employees and contractors will relate to the potential impacts their activities may have on stormwater runoff and water quality in Maine. The message statement is:

> *"The effect stormwater runoff has on the water quality of Maine waters is impacted by the level of effort put into the construction, operation, and maintenance of MTA's stormwater infrastructure. Polluted water entering the storm drain system and discharged untreated directly to waterbodies is used for drinking, fishing, and swimming, which impacts everyone in Maine."*

In addition to the Stormwater Awareness Plan message, the target audience will be informed of authorized non-stormwater discharges allowed by the permit provided they do not contribute to a violation of water quality standards, as determined by the DEP. These include the following:

- Landscape irrigation
- Diverted stream flows
- Rising ground waters
- Uncontaminated ground water infiltration (as defined at 40 CFR 35.2005(20))
- Uncontaminated pumped ground water
- Uncontaminated flows from foundation drains
- Air conditioning and compressor condensate
- Irrigation water
- Flows from uncontaminated springs
- Uncontaminated water from crawl space pumps
- Uncontaminated flows from footing drains
- Lawn watering runoff
- Flows from riparian habitats and wetlands
- Residual street wash water (where spills/leaks of toxic or hazardous materials have not occurred, unless all spilled material has been removed and detergents are not used)
- Hydrant flushing and fire fighting activity runoff
- Water line flushing and discharges from potable water sources

4.1 OUTREACH TOOL(S) AND DISTRIBUTION

This Stormwater Awareness Plan and message will be provided to each MTA employee at annual training sessions and also to each contractor before commencement of work, in addition to the Targeted BMP Adoption Plan.

MTA has established or will rely on a number of outreach tools including the following:

- Existing stormwater training programs
  - For MTA employees, the internal training program will be evaluated annually (and updated, as needed) to include storm water topics in order to assess process and impact indicators; and
  - For contractors, MTA continues to require an On-Site Responsible Party (OSRP) certified by DEP's NPS Training Program to be knowledgeable of stormwater, specifically erosion prevention, sedimentation control and other potential impacts to water quality in Maine.
- Stormwater information packages to raise awareness and encourage utilization of targeted BMPs
  - For MTA employees, information will be provided during annual and supplemental training sessions. Informational packages may also be provided via MTA's newsletters and memos posted to employee bulletin boards, as well as through employee meetings, including quarterly Environmental Health & Safety Committee meetings.
  - For contractors, MTA will continue to include contractual requirements provided in the standard contract language that establishes the anticipated expectations for performance and payment. Stormwater information will be discussed or provided to contractors prior to starting work (e.g., at Pre-Construction meetings).

4.2 TIMELINE AND IMPLEMENTATION SCHEDULE

The timeline and implementation schedule is determined by:

- The training schedule established each year for MTA employees; and
- The solicitation and project award notices each year.

MTA has established a representative training schedule for each year and is similar to the table below:

Date	Training Type
April	Erosion and Sediment Control (ESC) and Stormwater Pollution Prevention for highway maintenance Supervisors and Foremen
May - June	Spill Prevention Control and Countermeasures Plan (SPCC), Stormwater and Erosion and Sediment Control (ESC) for MTA maintenance and engineering employees.
October	Spill Prevention Control and Countermeasures Plan (SPCC) and Stormwater for Fare Collections

The training sessions are designed to meet the goal of increasing awareness, as well as encouraging utilization of targeted BMPs to reduce stormwater runoff and potential impacts. In addition to these training sessions, there may be supplemental training sessions as needed and/or new information posters about stormwater BMPs posted at MTA facilities. Newsletters including stormwater information may also be sent each year to employees.

For contractors, MTA's requirement to have an OSRP certified by DEP's NPS Program ensures that the contractor is aware of stormwater related issues. In addition, MTA distributes this Stormwater Awareness Plan to contractors.

4.3 RESPONSIBLE PARTY

The primary responsible party at MTA is the Environmental Services Coordinator, John Branscom. The Environmental Services Coordinator may also rely on the following:

- MTA Supervisors, Foremen, Inspectors and/or other personnel to inform MTA employees and contractors of the targeted BMPs to be utilized;
- An environmental consulting firm, such as GZA GeoEnvironmental, Inc, to ensure MTA's employees are trained as defined by the Plan; and
- A design engineering firm, such as HNTB, who administer construction contracts, to ensure the Plan is properly implemented by the contractors.

4.4 EVALUATION PROTOCOL

MTA training is documented with attendance sign-in sheets, exam scores, in-class workshops and evaluation forms. A training database is maintained with information gathered from employees during each training session.

Process Indicators: Assessment of the program execution will be included in the annual report. The following topics will be reported for MTA employees:

1. Number of employees that attended training; and
2. Average exam scores for attendees.

Impact Indicators: Gauging the achievement of goals and objectives of the program will be included in the annual report. These will be addressed by the following behavioral change questions:

1. Number or percentage of employees to identify the goals of MCM #1 correctly;
2. Number or percentage of employees to identify source(s) of storm water pollution;
3. Number or percentage of employees to identify and differentiate between structural and non-structural BMPs; and
4. Number or percentage of employees to demonstrate an applied knowledge of BMP-specific information.

Process and impact indicators for contractors will be tracked by documenting the pre-construction meetings when this Plan and the Targeted BMP Adoption Plan are provided to each contractor and the contractor, in turn, provides MTA with the certification for their OSRP for the project.

4.5 PLAN MODIFICATION

This Stormwater Awareness Plan may require modification if evaluation data shows that efforts are not effective. Should modifications be needed, the plan will be revised or a new plan will be developed.

I have read and accept the policies outlined in this Stormwate Awareness Plan as required by MTA's MS4 Permit.

_____	_____
Contractor Signature of Acknowledgement	Date
_____	_____
Printed Name	Project Number

Maine Turnpike Authority
MS4 Targeted BMP Adoption Plan

Developing and implementing a Best Management Plan (BMP) Adoption Plan is a requirement of the Maine Department of Environmental Protection's (DEP's) *General Permit for the Discharge of Stormwater from Maine Department of Transportation (MaineDOT) and Maine Turnpike Authority (MTA) Municipal Separate Storm Sewer Systems* (MS4s). Since MTA is subject to this MS4 permit and its six *Minimum Control Measures* (MCMs), *Part IV(H)(1)(a)(ii)* requires MTA to conduct Public Education and Outreach (MCM #1) efforts that **encourage *"employees and contractors to utilize BMPs that minimize stormwater pollution."***

1.0 PERMIT LANGUAGE

Part IV(H)(1) of the MS4 Permit establishes three goals for *MCM #1 - Public Education and Outreach on Stormwater Impacts*. These include the following:

1. *To raise awareness that polluted stormwater runoff is one of the most significant sources of water quality problems for Maine's waters;*
2. *To motivate staff and contractors to use Best Management Practices (BMPs) which reduce polluted stormwater runoff; and*
3. *To reduce polluted stormwater runoff as a result of increased awareness and utilization of BMPs.*

In addition to continuing outreach efforts from the previous MS4 Permit (e.g., 5-year cycle)[1], MTA must satisfy these three goals by encouraging employees and contractors to use BMPs that minimize stormwater pollution as part of this Targeted BMP Adoption Plan. The progress and effectiveness of the Plan and associated efforts must then be evaluated and included in each annual report submitted to Maine DEP in accordance with *Part IV(J)* of the MS4 Permit. As part of this evaluation, MTA must include an assessment of process indicators and impact indicators to evaluate efforts in meeting these goals. In the fifth annual report, the BMP Adoption Plan shall be reviewed fully and include analysis of the process and impact indicators.

2.0 COVERAGE AREA

This plan has been developed for implementation by MTA to meet MS4 Permit requirements for Urbanized Areas (UAs) within MTA's right-of-way (ROW).

Process indicators are related to the execution of the program, such as (1) percent or number of employees who attend a training session; or (2) completion of a particular action item (e.g., distributing posters to employee work place and/or contractor job site).

Impact indicators are related to the achievement of the goals and objectives of the program, such as (1) observable/measurable effects on behavior; or (2) percent or number of employees to describe sources of storm water pollution, proper spill response, or maintenance of a BMP.

[1] Public education and outreach efforts continued from the previous MS4 permit cycle include (but are not limited to) conducting annual stormwater pollution prevention/spill prevention control and countermeasures (SPCC) training to MTA maintenance and engineering employees, as well as other Measurable Goals that can be found in MTA's Stormwater Program Management Plan (SPMP) dated December 2013.

3.0 OBJECTIVE

The objective of this Targeted BMP Adoption Plan is to educate MTA's employees and contractors to use BMPs which reduce polluted stormwater runoff within UA.

The goal of the BMP Adoption Plan is to target BMPs in the MaineDOT BMP Manual to be utilized by employees and contractors that minimize stormwater pollution during construction activities, such as:

(1) Installing silt fence prior to land disturbance; and

(2) Ensuring that hay mulch is applied to soil at the end of each work day.

For MTA employees, focus will also be given to targeting BMPs relevant to transportation-related maintenance and good housekeeping activities, such as:

(1) Regular sweeping of the mainline and peripheral facilities;

(2) Annual catch basin clean-outs and sediment removal;

(3) As needed ditch cleaning and repair;

(4) On-going culvert maintenance and litter removal.

Contractors are also encouraged to utilize BMPs in accordance with standard construction contract language (e.g., Special Provision 656), as well as the MaineDOT BMP Manual.

4.0 MESSAGE

The message MTA will strive to impart on employees and contractors will relate to the impacts their activities have on stormwater runoff and the importance of BMPs. The message statement is:

> *"Implementing appropriate BMPs, as described in MaineDOT's Stormwater BMPs Manual, to all MTA related activities will help to minimize stormwater pollutants introduced to Maine's waterbodies."*

4.1 OUTREACH TOOL(S) AND DISTRIBUTION

Targeted BMPs are included in the MaineDOT BMP Manual that is available at each MTA maintenance facility and referenced in standard contract language for contractors.

MTA has established or will rely on a number of outreach tools including the following:

- Existing stormwater training programs
  - For MTA employees, the internal training program will be evaluated annually (and updated, as needed) to include storm water topics in order to assess process and impact indicators; and
  - For contractors, MTA continues to require an On-Site Responsible Party (OSRP) certified by DEP's NPS Training Program to be knowledgeable in erosion prevention and sedimentation control.
- Existing standard contract language
  - Requires contractors to maintain a certified OSRP on-site who has authority to implement BMPs appropriately; and
  - Specifies that contractors must utilize MaineDOT's BMP Manual, as well as other BMPs, to ensure construction site runoff is minimized.
- Stormwater information packages to raise awareness and encourage utilization of targeted BMPs
  - For MTA employees, information will be provided during annual and supplemental training sessions. Informational packages may also be provided via MTA's newsletters

and memos posted to employee bulletin boards, as well as through employee meetings, including quarterly Environmental Health & Safety Committee meetings.

- For contractors, MTA will continue to include contractual requirements provided in the standard contract language that establishes the anticipated expectations for performance and payment. This Target BMP Adoption Plan will also be provided to contractors prior to starting work (e.g., at Pre-Construction meetings).

4.2 TIMELINE AND IMPLEMENTATION SCHEDULE

The timeline and implementation schedule is determined by:

- The training schedule established each year for MTA employees; and
- The solicitation and project award notices each year.

MTA has established a representative training schedule for each year and is similar to the table below.

Date	Training Type
April	Erosion and Sediment Control (ESC) and Stormwater Pollution Prevention for Highway Maintenance Supervisors and Foremen
May - June	Spill Prevention Control and Countermeasures Plan (SPCC), Stormwater and Erosion and Sediment Control (ESC) for MTA maintenance and engineering employees.

In addition to the training sessions above, there may be supplemental training sessions as needed and/or new information posters about stormwater BMPs posted at MTA facilities. Newsletters including stormwater information may also be sent each year to employees.

For contractors, targeted BMPs are already being implemented in accordance with contract language and the MaineDOT BMP Manual. In addition, MTA distributes this Targeted BMP Adoption Plan to contractors.

4.3 RESPONSIBLE PARTY

The primary responsible party at MTA is the Environmental Services Coordinator, John Branscom. The Environmental Services Coordinator may also rely on the following:

- MTA Supervisors, Foremen, Inspectors and/or other personnel to inform MTA employees and contractors of the targeted BMPs to be utilized;
- An environmental consulting firm, such as GZA GeoEnvironmental, Inc, to ensure MTA's employees are trained as defined by the Plan; and
- A design engineering firm, such as HNTB, who administer construction contracts, to ensure the Plan is properly implemented by the contractors.

5.0 EVALUATION PROTOCOL

MTA training is documented with attendance sign-in sheets, exam scores, in-class workshops and evaluation forms. A training database is maintained with information gathered from employees during each training session.

Process Indicators: Assessment of the program execution will be included in the annual report. The following topics will be reported for MTA employees:

1. Number of employees that attended training; and
2. Average exam scores for attendees.

Impact Indicators: Gauging the achievement of goals and objectives of the program will be included in the annual report. These will be addressed by the following behavioral change questions:

1. Number or percentage of employees to identify the goals of MCM #1 correctly;

2. Number or percentage of employees to identify source(s) of storm water pollution;
3. Number or percentage of employees to identify and differentiate between structural and non-structural BMPs; and
4. Number or percentage of employees to demonstrate an applied knowledge of BMP-specific information.

Process and impact indicators for contractors will be tracked and evaluated based on daily and/or weekly inspections conducted on-site.

6.0 PLAN MODIFICATION

This Targeted BMP Adoption Plan may require modification if evaluation data shows that efforts are not effective. Should modifications be needed, the plan will be revised or a new plan will be developed.

I have read and accept the policies outlined in this Stormwater Awareness Plan as required by MTA's MS4 Permit.

_____	_____
Contractor Signature of Acknowledgement	Date
_____	_____
Printed Name	Project Number

APPENDIX C

DEFINED TERMS

DEFINED TERMS

- **AVI (Automatic Vehicle Identification)**: a system consisting of an antenna and reader installed in a toll lane for communication with a transponder located on a vehicle for automatic identification of the transponder as it passes through the lane.
- **Sensor Loops**: a system for automatic vehicle detection, separation and classification.
- **COMM** - Communications
- **Components**: parts that compose a device or piece of equipment.
- **EMT** - Electrical Metallic Tubing
- **Gradient Sensor** – Part of the Sensor Loop system - a gradient sensor is placed on each side of the Primary sensor.
- **Contractor**: the Contractor hired by the Authority through a solicitation process to complete the Project.
- **JB** - Junction Box
- **Lane Controller (LC)**: A computer system for each type of toll lane that controls the lane equipment.
- **MTA -** Maine Turnpike Authority
- **NTS** -Not to Scale
- **Paypoint Sensor** – Part of the Sensor Loop system. Detects when the vehicle has reached the lane paypoint.
- **Primary Sensor** – Part of the Sensor Loop system. Located between two gradient sensors, a 6’ x ‘6 square sensor that participates in vehicle classification.
- **Project:** shall mean the upgrade of the existing Toll Lanes to the toll collection system described in herein.
- **RMC** - Rigid Metallic Conduit
- **Specifications**: shall mean the Technical Specification and instructions included in this document for the purpose of defining the installation procedures
- **SI (Systems Integrator) -** The systems integrator/contractor for the MTA toll system.
- **SS** - Stainless Steel
- **UPS** - Uninterrupted Power Supply

APPENDIX D

PLAZA WORK CHECKLIST

PLAZA – WORK CHECKLIST

DATE SUBMITTED:		**DATE APPROVED:**				
REVISION #1:		**DATE APPROVED:**				
REVISION #2:		**DATE APPROVED:**				

PROPOSED EQUIPMENT	**PROPOSED LOCATION**	**POWER SOURCE**		**EXTRA WORK (Y/N)**	**APPRVL DATE**	**APPRVL BY**
		PANEL	**CIRCUIT**			
(2) AVI READERS						
(26) SENSOR LOOPS						
(2) DVAS CAMERA MOUNTS						
(2)LANE CONTROLLER CABINETS						
(12) VCARS CAMERAS						
(10) AVI ANTENNAS						
(2) LIGHTNING SUPPRESSION SYSTEMS						
(2) CANOPY LIGHTING SYSTEMS						

EXISTING TO REMAIN EQUIPMENT	**LOCATION**	**POWER SOURCE**		**EXTRA WORK (Y/N)**	**APPRVL DATE**	**APPRVL BY**
		PANEL	**CIRCUIT**			
(1) UPS IN TUNNEL						

EXISTING EQUIPMENT TO BE REMOVED	**LOCATION**	**POWER SOURCE**		**EXTRA WORK (Y/N)**	**APPRVL DATE**	**APPRVL BY**
		PANEL	**CIRCUIT**			
(4) ENTRY LOOPS						
(4) EXIT LOOPS						
(4) TREADLES						
(4) LIGHT CURTAIN						
(4) PATRON FARE DISPLAY						
(4) ISLAND TRAFFIC LIGHT						
(2) OVERHEAD SCANNER						
(4) CANOPY OVERRIDE SWITCH						
(6) RED/GREEN LIGHTS						
(2) RED LIGHTS						
(4) AVI ANTENNAS						
PORTION OF LIGHTNING SUPPRESSION SYSTEM						
PORTION OF CANOPY LIGHTING						

EXPLANATION OF ALL EXTRA WORK (USE ADDITIONAL SHEET IF REQUIRED)

APPENDIX E

POWER PANEL SCHEDULES

PANEL NAME:		NB ENTRANCE CP PANEL	MOUNTING:				SURFACE			BRANCH CIRCUIT:					CIRCUIT BREAKER		
LOCATION:		INSIDE NB ENTRANCE CP PANEL	VOLTAGE:				240/120			MINIMUM AIC:					22000		
MAIN TYPE:		NB ENTRANCE CP PANEL	PHASES:				1			BUSS RATING:					60 AMP		
ENCLOSURE:		TYPE 1	WIRES:				4										
LOAD CLASS	CKT #	LOAD DESCRIPTION	LOAD (VA)	AMPS	WIRE SIZE	CB P	CB AMP	LOAD L1	LOAD L2	CB AMP	CB P	WIRE SIZE	AMPS	LOAD (VA)	LOAD DESCRIPTION	CKT #	LOAD CLASS
2	1	DVAS CAMERA ENCLOSURE FIELD WIRING POWER STRIP	600	5	12	1	20	1200		20	1	12	5	600	LANE CONTROLLER FIELD WIRING (T1) TERMINAL BLOCK	2	2
2	3	RECEPTACLE FOR AVI READER	1200	10	12	1	20		2280	20	1		9	1080	FUTURE USE	4	2
	5	SPACE						1080		20	1		9	1080	FUTURE USE	6	2
	7	SPACE													SPACE	8	
	9	SPACE													SPACE	10	
	11	SPACE													SPACE	12	
	13	SPACE													SPACE	14	
	15	SPACE													SPACE	16	
5	17	TVSS			10	2	30								SPACE	18	
5	19				10										SPACE	20	
			TOTAL VA:					2280	2280								

PANEL NAME:		NB EXIT CP PANEL	MOUNTING:				SURFACE			BRANCH CIRCUIT:					CIRCUIT BREAKER		
LOCATION:		INSIDE NB EXIT CP PANEL	VOLTAGE:				240/120			MINIMUM AIC:					22000		
MAIN TYPE:		NB EXIT CP PANEL	PHASES:				1			BUSS RATING:					60 AMP		
ENCLOSURE:		TYPE 1	WIRES:				4										
LOAD CLASS	CKT #	LOAD DESCRIPTION	LOAD (VA)	AMPS	WIRE SIZE	CB P	CB AMP	LOAD L1	LOAD L2	CB AMP	CB P	WIRE SIZE	AMPS	LOAD (VA)	LOAD DESCRIPTION	CKT #	LOAD CLASS
2	1	DVAS CAMERA ENCLOSURE FIELD WIRING POWER STRIP	600	5	12	1	20	1200		20	1	12	5	600	LANE CONTROLLER FIELD WIRING (T1) TERMINAL BLOCK	2	2
2	3	RECEPTACLE FOR AVI READER	1200	10	12	1	20		2280	20	1		9	1080	FUTURE USE	4	2
	5	SPACE						1080		20	1		9	1080	FUTURE USE	6	2
	7	SPACE													SPACE	8	
	9	SPACE													SPACE	10	
	11	SPACE													SPACE	12	
	13	SPACE													SPACE	14	
	15	SPACE													SPACE	16	
5	17	TVSS			10	2	30								SPACE	18	
5	19				10										SPACE	20	
			TOTAL VA:					2280	2280								

PANEL NAME:		SB ENTRANCE-EXIT CP PANEL	MOUNTING:			SURFACE				BRANCH CIRCUIT:					CIRCUIT BREAKER		
LOCATION:		INSIDE SB ENTRANCE-EXIT CP PANEL	VOLTAGE:			240/120				MINIMUM AIC:					22000		
MAIN TYPE:		SB ENTRANCE-EXIT CP PANEL	PHASES:			1				BUSS RATING:					60 AMP		
ENCLOSURE:		TYPE 1	WIRES:			4											
LOAD CLASS	CKT #	LOAD DESCRIPTION	LOAD (VA)	AMPS	WIRE SIZE	CB P	CB AMP	LOAD L1	LOAD L2	CB AMP	CB P	WIRE SIZE	AMPS	LOAD (VA)	LOAD DESCRIPTION	CKT #	LOAD CLASS
2	1	DVAS CAMERA ENCLOSURE FIELD WIRING POWER STRIP	600	5	12	1	20	1200		20	1	12	5	600	LANE CONTROLLER FIELD WIRING (T1) TERMINAL BLOCK	2	2
2	3	RECEPTACLE FOR AVI READER	1200	10	12	1	20		2280	20	1		9	1080	FUTURE USE	4	2
	5	SPACE						1080		20	1		9	1080	FUTURE USE	6	2
	7	SPACE													SPACE	8	
	9	SPACE													SPACE	10	
	11	SPACE													SPACE	12	
	13	SPACE													SPACE	14	
	15	SPACE													SPACE	16	
5	17	TVSS			10	2	30								SPACE	18	
5	19				10										SPACE	20	
			TOTAL VA:					2280	2280								

PANEL NAME:		UTILITY BUILDING "CP1" PANEL	MOUNTING:			SURFACE				BRANCH CIRCUIT:					CIRCUIT BREAKER		
LOCATION:		INSIDE UTILITY BUILDING "CP1" PANEL	VOLTAGE:			240/120				MINIMUM AIC:					22000		
MAIN TYPE:		CLEAN POWER - "CP1"	PHASES:			1				BUSS RATING:					200 AMP		
ENCLOSURE:		TYPE 1	WIRES:			4											
LOAD CLASS	CKT #	LOAD DESCRIPTION	LOAD (VA)	AMPS	WIRE SIZE	CB P	CB AMP	LOAD L1	LOAD L2	CB AMP	CB P	WIRE SIZE	AMPS	LOAD (VA)	LOAD DESCRIPTION	CKT #	LOAD CLASS
9	1	NB EXIT CP PANEL	2280	19	2	2	30	4560		30	2	2	19	2280	SB ENTRANCE-EXIT CP PANEL	2	9
9	3		2280	19	2				4560			2	19	2280		4	9
9	5	NB ENTRANCE CP PANEL	2280	19	2	2	30	4560		30	2	2	19	2280	FUTURE USE	6	9
9	7		2280	19	2				4560			2	19	2280		8	9
7	9	RACK 1 - TWIST LOCK, 2 RECEPTACLES	2880	24	10	1	30	2880							SPACE	10	
	11	SPACE													SPACE	12	
	13	SPACE													SPACE	14	
	15	SPACE													SPACE	16	
	17	SPACE													SPACE	18	
	19	SPACE													SPACE	20	
	21	SPACE													SPACE	22	
	23	SPACE													SPACE	24	
	25	SPACE													SPACE	26	
5	27	TVSS			10	2	30								SPACE	28	
5	29				10										SPACE	30	
			TOTAL VA:					12000	9120								

PANEL NAME:		UTILITY BUILDING "DP1" PANEL	MOUNTING:			SURFACE				BRANCH CIRCUIT:					CIRCUIT BREAKER		
LOCATION:		INSIDE UTILITY BUILDING "DP1" PANEL	VOLTAGE:			240/120				MINIMUM AIC:					22000		
MAIN TYPE:		DIRTY POWER - "DP1"	PHASES:			1				BUSS RATING:					400 AMP		
ENCLOSURE:		TYPE 1	WIRES:			4											
LOAD CLASS	CKT #	LOAD DESCRIPTION	LOAD (VA)	AMPS	WIRE SIZE	CB P	CB AMP	LOAD L1	LOAD L2	CB AMP	CB P	WIRE SIZE	AMPS	LOAD (VA)	LOAD DESCRIPTION	CKT #	LOAD CLASS
4	1	HVAC WITH 15 KW HEATER - CKT A	7500	63	4	2	90	7980		15	1	14	4	480	INTERIOR LIGHTING	2	1
4	3		7500	63	4				7740	15	1	14	2	240	EXTERIOR LIGHTING	4	1
7	5	UNINTERRUPTABLE POWER SUPPLY (UPS)	13333	111	2	2	150	15253		20	1	12	16	1920	5 EACH DUPLEX RECEPTACLES	6	2
7	7		10133	84	2				10733	15	1	14	5	600	EXHAUST FANS	8	3
2	9	NB ENTRANCE RAMP LIGHTING - EXISTING						600		15	1	12	5	600	ACCESS CARD READER/SECURITY SYS	10	2
2	11														SB ENTRANCE RAMP LIGHTING - EXISTING	12	2
2	13	NB EXIT RAMP LIGHTING - EXISTING														14	2
2	15														SB EXIT RAMP LIGHTING - EXISTING	16	2
	17	HIGHWAY ADVISORY RADIO - EXISTING														18	2
	19	OVERHEIGHT DETECTION - EXISTING													SPACE	20	
	21	SPACE													SPACE	22	
	23	SPACE													SPACE	24	
	25	SPACE													SPACE	26	
5	27	TVSS			10	2	30								SPACE	28	
5	29				10										SPACE	30	
			TOTAL VA:					23833	18473								